Technical Data Sheet
Inverter UMP1 22kW 3 phase Input 3 phase Output
IP55

Technical Data

Power 22kW

SUPPLY	AC 3PH 380-440V	
INPUT CURRENT G*	51	A
INPUT CURRENT P	64	A
OUTPUT VOLTAGE	3PH 0~Vin	V
OUTPUT CURRENT G	45	A
OUTPUT CURRENT P	60	A
IP	55	
EMC FILTER C3	built-in	
EMC FILTER C2	optional	
BRAKING UNIT	built-in	



*G represents the constant torque and P represents the variable torque

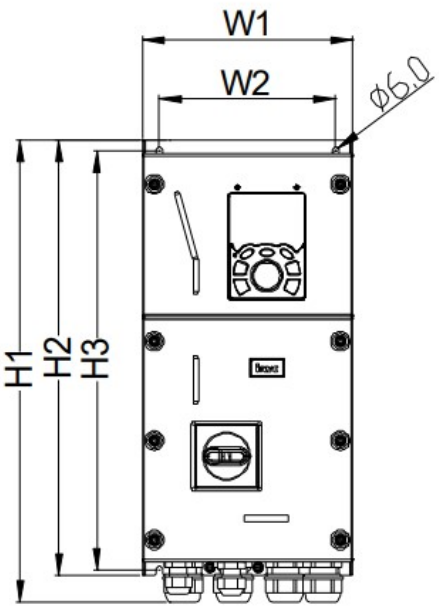

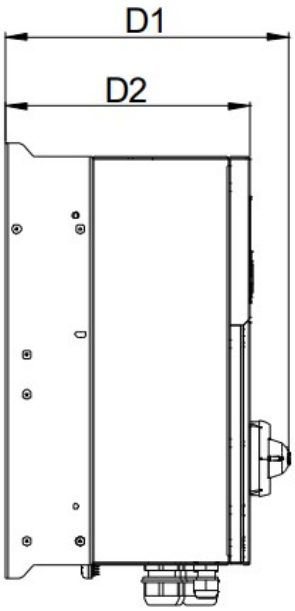

Installation dimensions

H1	551.5 mm
H2	522 mm
H3	504 mm
W1	274 mm
W2	234 mm
W3	- mm
W4	- mm
D1	281.8 mm
D2	246 mm
Hole diameter	7 mm
Screw	M6

Universal Motors S.A.
Rua Comendador Brandão, 484
4495-375 Póvoa de Varzim
geral@universalmotors.pt
TEL.: 252 299 080

Universal Motors UK, Ltd
Unit E2, Meltham Mills Road
West Yorkshire HD9 4AR
enquiries@universalmotors-group.co.uk
TEL.: +44(0) 1484660222

Universal Motors SL
C/La Habana n.6 nave 4 Pl Camporroso
28806 Alcala de Henares
info@universalmotors-group.es
TEL.: 918 864 213

Technical Data Sheet
Inverter UMP1 22kW 3 phase Input 3 phase Output
IP55

Control Diagram

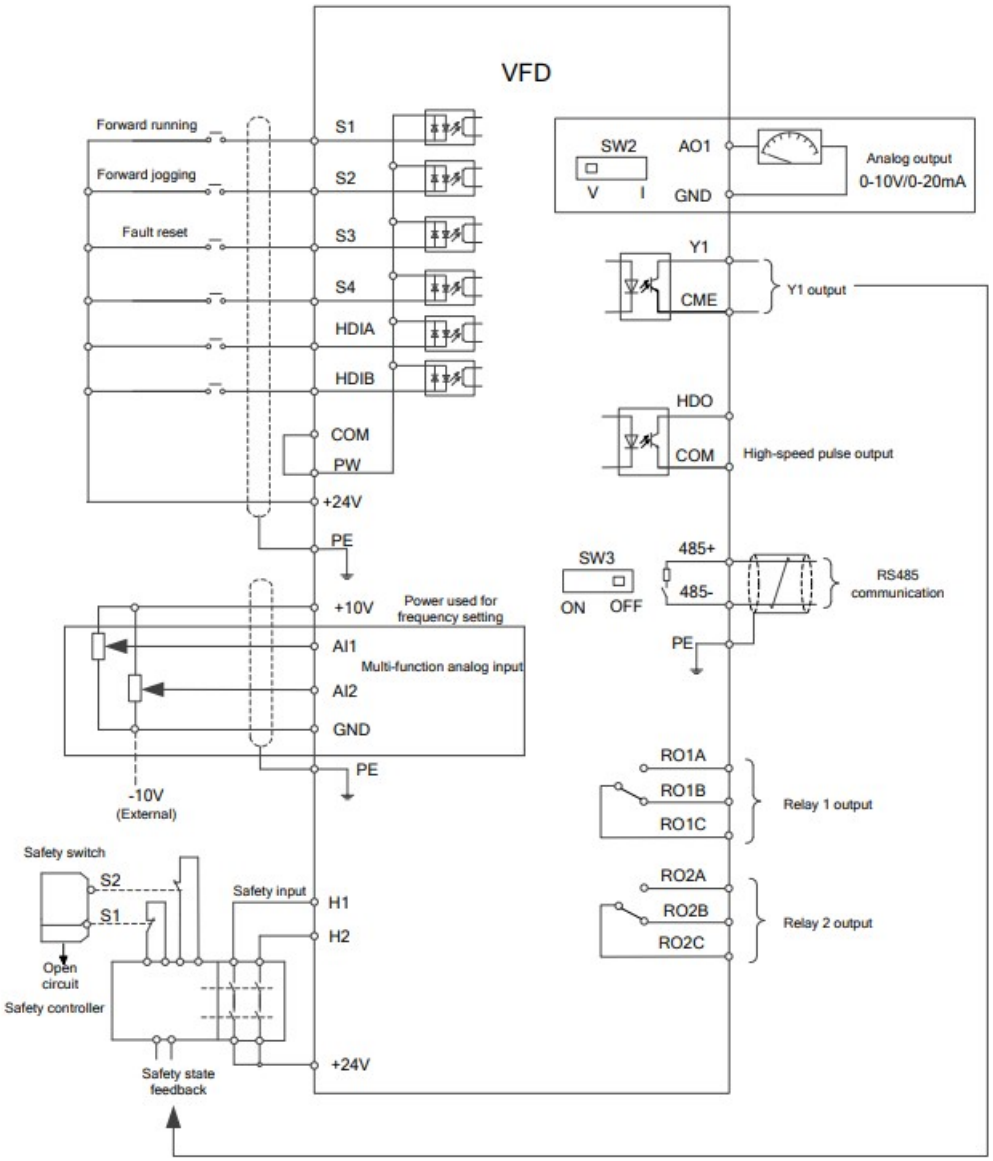

Packaging size

Height	680	mm
Width	390	mm
Depth	425	mm
Weight	24.5	Kg

Universal Motors S.A.
Rua Comendador Brandão, 484
4495-375 Póvoa de Varzim
geral@universalmotors.pt
TEL.: 252 299 080

Universal Motors UK, Ltd
Unit E2, Meltham Mills Road
West Yorkshire HD9 4AR
enquiries@universalmotors-group.co.uk
TEL.: +44(0) 1484660222

Universal Motors SL
C/La Habana n.6 nave 4 PI Camporroso
28806 Alcala de Henares
info@universalmotors-group.es
TEL.: 918 864 213