Technical Data Sheet
Gearbox
WORM GEARBOX ROUND DESIGN

MODEL	030	
Ø OUTPUT SHAFT	14	mm
APPROXIMATE RATIO	5	
EXACT RATIO	5.00	
OUTPUT SPEED	292	RPM
EXACT OUTPUT SPEED	292	RPM
INPUT POWER	0.18	KW
INPUT ROTATION	1400	RPM
INPUT PAM	63B14	
OUTPUT TORQUE	5.03	N.m
NOMINAL TORQUE	17.00	N.m
NOMINAL POWER	0.6	KW
SERVICE FACTOR	3.33	
DYNAMIC EFFICIENCY	0.82	

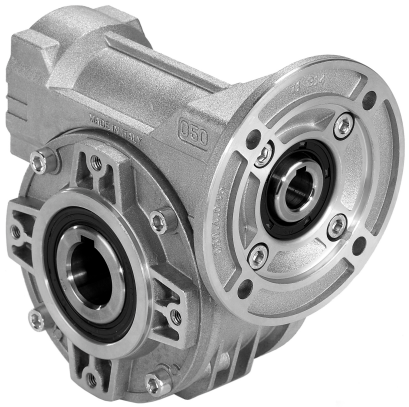

Oil Quantity (L)

B3/H1	B6/H4	B7/H3	B8/H2	V5/H5	V6/H6
0.03	0.03	0.03	0.03	0.03	0.03

Radial and Axial Loads

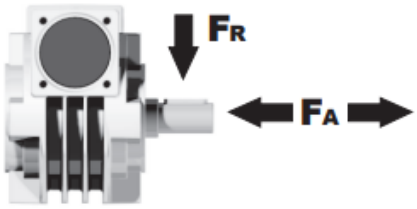

n_2 [min-1]	FA [N]	FR [N]
200	120	600
100	160	800
50	200	1000
15	280	1400

Universal Motors S.A.
Rua Comendador Brandão, 484
4495-375 Póvoa de Varzim
geral@universalmotors.pt
TEL.: 252 299 080

Universal Motors UK, Ltd
Unit E2, Meltham Mills Road
West Yorkshire HD9 4AR
enquiries@universalmotors-group.co.uk
TEL.: +44(0) 1484660222

Universal Motors SL
C/La Habana n.6 nave 4 Pl Camporroso
28806 Alcala de Henares
info@universalmotors-group.es
TEL.: 918 864 213

P030**FB**... Basic wormbox
Riduttore base

M. flanges	Kit code	øF	A
56B5	K030.4.041	120	61.5
63B5	K030.4.042	140	62.5
56B14	K030.4.046	80	61.5
63B14	K030.4.045	90	62.5

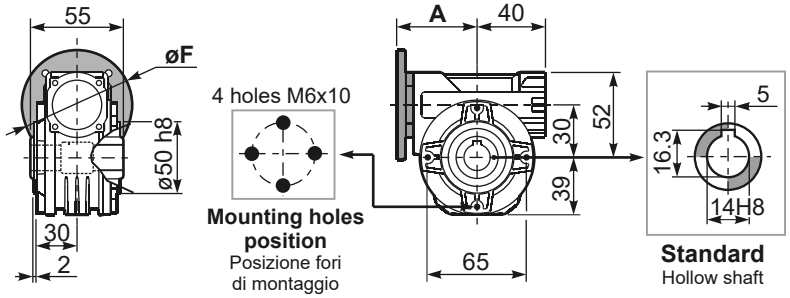

Gearbox weight peso riduttore: **1.05 kg**

P030**PA**... Feet
Piedini

P030**PB**... Feet
Piedini

P030**PV**... Feet
Piedini

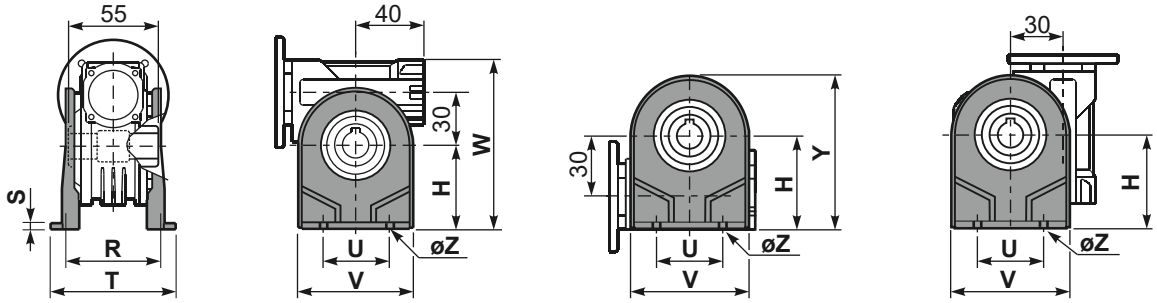

	H	R	S	T	U	V	Y	W	øZ	kit code
type **B**	55	66	3	87	50	78	94	107	ø6.5	K030.9.022
type **S**	52	66	3	87	52	90	91	104	ø6.5	KS030.9.023

P030**FC**... Output flange
Flangia uscita

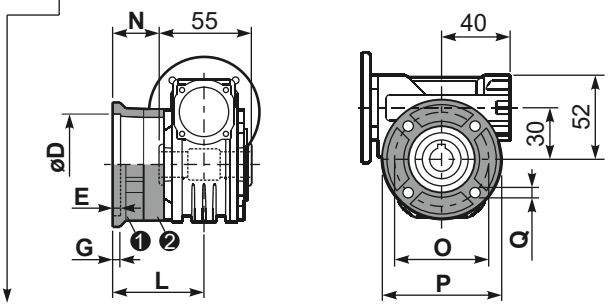

type **B**	øD	E	G	L	N	O	P	Q	kit code
FC	$50^{+0.15}_{+0.05}$	6	6	50.5	23	68	80	7	❶ K030.9.010 ❷ -
FL	$60^{+0.15}_{+0.05}$	6	6	55.5	28	87	110	8.5	❶ K045.9.010 ❷ -

type **S**	øD	E	G	L	N	O	P	Q	kit code
F1	$40^{+0.15}_{+0.10}$	3.5	5.5	49	21.5	56	80	6.5	❶ KS030.9.012 ❷ -

R030FB... Input shaft
Albero in entrata

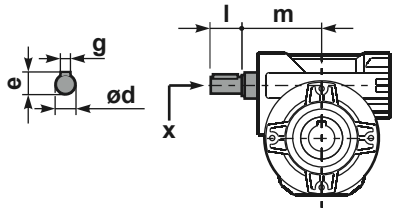

	ød	e	g	l	m	x	kit code
type **B**	9 h6	10.2	3	20	58	-	K030.5.006 PAM63
type **S**	-	-	-	-	-	-	-

P030**BR**... Reaction arm
Braccio di reazione

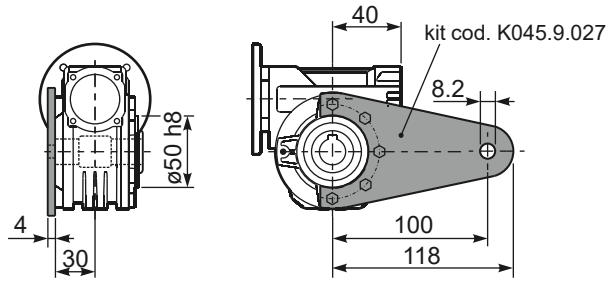

P030.....**S**... Single Shaft
Albero lento semplice

P030.....**D**... Double Shaft
Albero lento bisp.

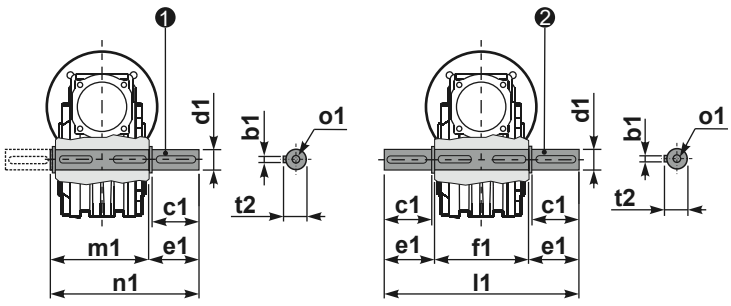

❶ kit cod. K030.5.028 type **B**

❷ kit cod. K030.5.029 type **B**

	b1	c1	d1	e1	f1	l1	m1	n1	t2	o1
type **B**	5	25	$14^{-0.005}_{-0.020}$	35.5	55	126	59	94.5	16	M5x14
type **S**	-	-	-	-	-	-	-	-	-	-