Technical Data Sheet
Gearbox
WORM GEARBOX ROUND DESIGN

MODEL	045	
Ø OUTPUT SHAFT	18	mm
APPROXIMATE RATIO	15	
EXACT RATIO	14.00	
OUTPUT SPEED	97	RPM
EXACT OUTPUT SPEED	104	RPM
INPUT POWER	0.25	KW
INPUT ROTATION	1400	RPM
INPUT PAM	71B14	
OUTPUT TORQUE	18.38	N.m
NOMINAL TORQUE	30.00	N.m
NOMINAL POWER	0.41	KW
SERVICE FACTOR	1.64	
DYNAMIC EFFICIENCY	0.77	

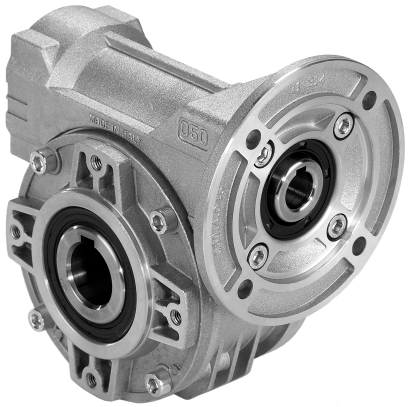

Oil Quantity (L)

B3/H1	B6/H4	B7/H3	B8/H2	V5/H5	V6/H6
0.09	0.09	0.09	0.09	0.09	0.09

Radial and Axial Loads

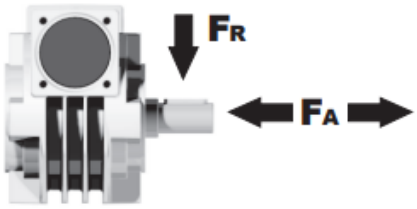

n_2 [min-1]	FA [N]	FR [N]
200	180	900
100	220	1100
50	260	1400
15	400	2000

Universal Motors S.A.
Rua Comendador Brandão, 484
4495-375 Póvoa de Varzim
geral@universalmotors.pt
TEL.: 252 299 080

Universal Motors UK, Ltd
Unit E2, Meltham Mills Road
West Yorkshire HD9 4AR
enquiries@universalmotors-group.co.uk
TEL.: +44(0) 1484660222

Universal Motors SL
C/La Habana n.6 nave 4 PI Camporroso
28806 Alcala de Henares
info@universalmotors-group.es
TEL.: 918 864 213

P045**FB**... Basic wormbox
Riduttore base

M. flanges	Kit code	øF	A
63B5	K050.4.041	138	74
71B5	K050.4.042	160	71.5
56B14	KC40.4.049	80	71.5
63B14	K050.4.047	90	74
71B14	K050.4.045	105	71.5

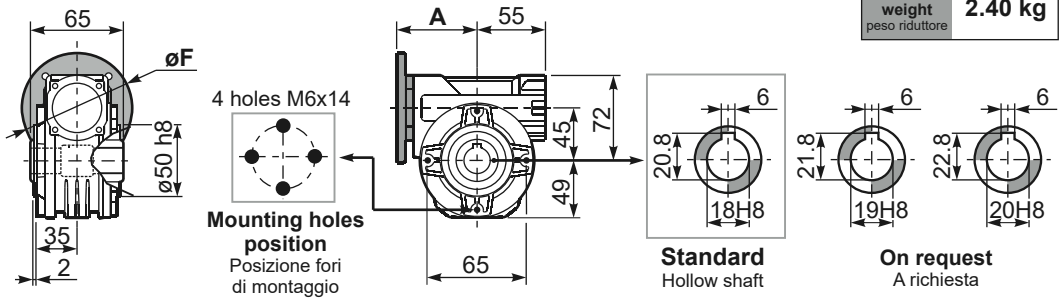

Gearbox weight peso riduttore **2.40 kg**

P045**PA**... Feet
Piedini

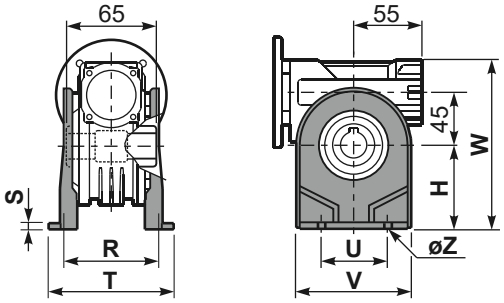

P045**PB**... Feet
Piedini

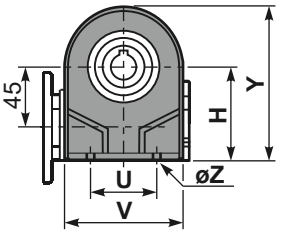

P045**PV**... Feet
Piedini

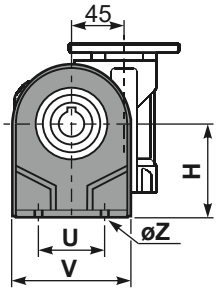

	H	R	S	T	U	V	Y	W	øZ	kit code
type **B**	72	81	3	100	52	98	121	144	ø10.5	K045.9.022
type **S**	71	84	8	100	70	90	120	143	ø8	KS045.9.023

P045**FC**... Output flange
Flangia uscita

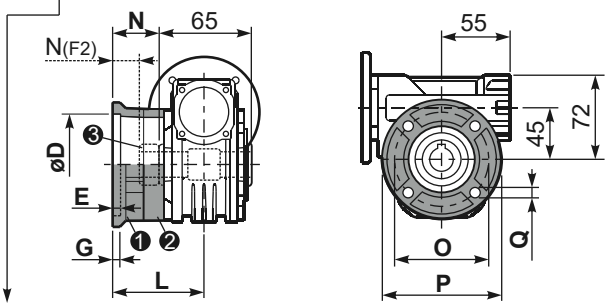

type **B**	øD	E	G	L	N	O	P	Q	kit code
FC	$60^{+0.15}_{+0.05}$	9	9	60.5	28	87	110	8.5	❶ K045.9.010 ❷ -
FL	$60^{+0.15}_{+0.05}$	9	9	90.5	58	87	110	8.5	❶ K045.9.010 ❷ K045.0.200

type **S**	øD	E	G	L	N	O	P	Q	kit code
F1	$95^{+0.20}_{+0.15}$	4	11	73.5	41	115	140	9	❶ KS045.9.013 ❷ -
F2	$60^{+0.15}_{+0.05}$	9	9	60.5	19	87	110	8.5	❶ KS045.9.010 ❸ S045.0.204
F3	$80^{+0.15}_{+0.10}$	3	8	51.5	19	100	120	9	❶ KS045.9.014 ❷ -

R045FB... Input shaft
Albero in entrata

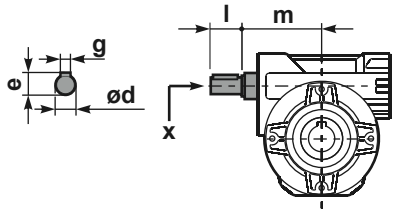

	ød	e	g	l	m	x	kit code
type **B**	11 h6	12.5	4	30	68	-	❶ K045.5.006 PAM71 ❷ -
type **S**	-	-	-	-	-	-	❶ - ❷ -

P045**BR**... Reaction arm
Braccio di reazione

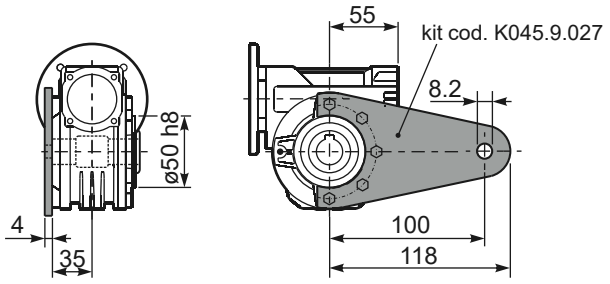

P045.....**S**... Single Shaft
Albero lento semplice

P045.....**D**... Double Shaft
Albero lento bisp.

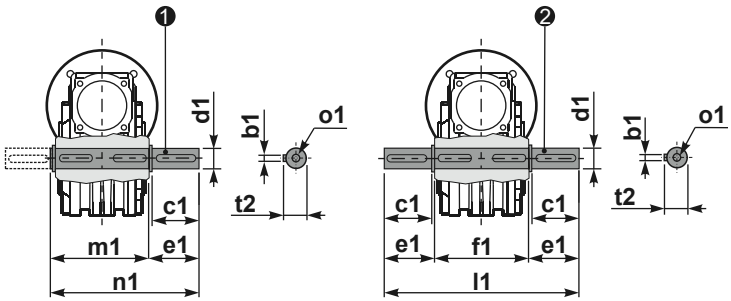

❶ kit cod. K045.5.028 type **B**
kit cod. KS045.5.030 type **S**

❷ kit cod. K045.5.029 type **B**

	b1	c1	d1	e1	f1	l1	m1	n1	t2	o1
type **B**	6	32	$18^{-0.005}_{-0.020}$	43	65	151	70	113	20.5	M6x18
type **S**	6	40	$19^{-0.005}_{-0.020}$	58.8	-	-	70	128.5	21.5	M8x20