Technical Data Sheet
Gearbox
WORM GEARBOX ROUND DESIGN

MODEL	050	
Ø OUTPUT SHAFT	25	mm
APPROXIMATE RATIO	25	
EXACT RATIO	26.00	
OUTPUT SPEED	58	RPM
EXACT OUTPUT SPEED	56	RPM
INPUT POWER	0.25	KW
INPUT ROTATION	1400	RPM
INPUT PAM	71B14	
OUTPUT TORQUE	30.59	N.m
NOMINAL TORQUE	66.00	N.m
NOMINAL POWER	0.54	KW
SERVICE FACTOR	2.16	
DYNAMIC EFFICIENCY	0.69	

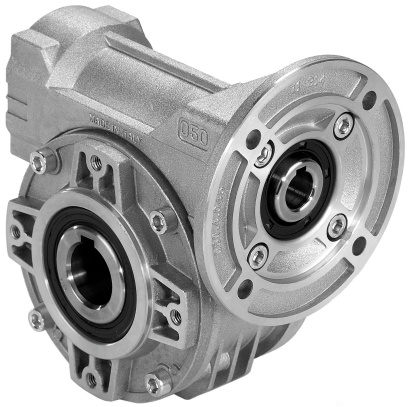

Oil Quantity (L)

B3/H1	B6/H4	B7/H3	B8/H2	V5/H5	V6/H6
0.14	0.14	0.14	0.14	0.14	0.14

Radial and Axial Loads

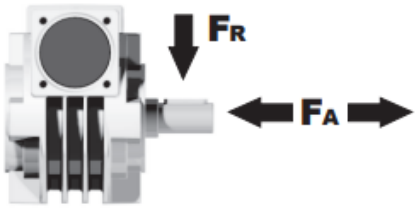

n_2 [min-1]	FA [N]	FR [N]
200	240	1200
100	300	1500
50	380	1900
15	560	2800

Universal Motors S.A.
Rua Comendador Brandão, 484
4495-375 Póvoa de Varzim
geral@universalmotors.pt
TEL.: 252 299 080

Universal Motors UK, Ltd
Unit E2, Meltham Mills Road
West Yorkshire HD9 4AR
enquiries@universalmotors-group.co.uk
TEL.: +44(0) 1484660222

Universal Motors SL
C/La Habana n.6 nave 4 Pl Camporroso
28806 Alcala de Henares
info@universalmotors-group.es
TEL.: 918 864 213

P050**FB**... Basic wormbox
Riduttore base

M. flanges	Kit code	øF	A
63B5	K050.4.041	138	78.5
71B5	K050.4.042	160	76
80B5	K050.4.043	200	76.5
56B14	KC40.4.049	80	76
63B14	K050.4.047	90	78.5
71B14	K050.4.045	105	76
80B14	K050.4.046	120	76.5

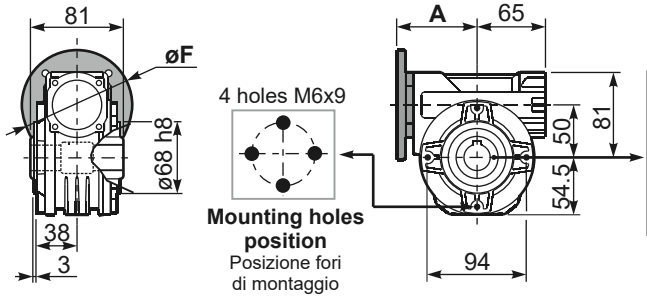

Gearbox weight / peso riduttore: **3.00 kg**

P050**PA**... Feet
Piedini

P050**PB**... Feet
Piedini

P050**PV**... Feet
Piedini

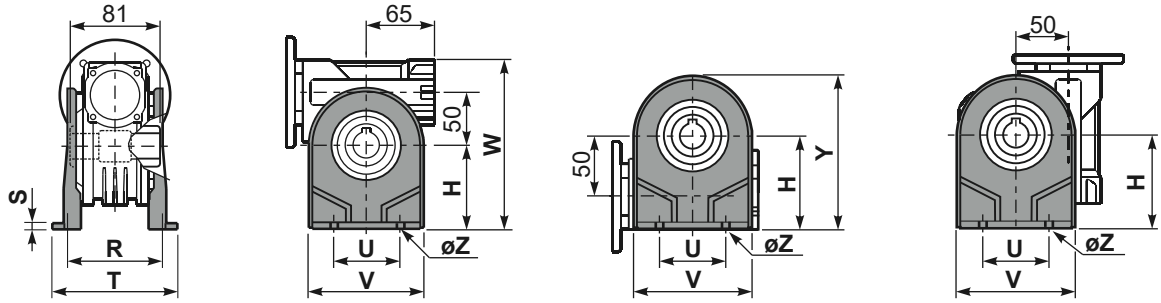

	H	R	S	T	U	V	Y	W	øZ	kit code
type **B**	82	98.5	3.5	123	63	113	138.5	163	ø10.5	K050.9.022
type **S**	85	96	10	114	85	110	139.5	166	ø10	KS050.9.023

P050**FC**... Output flange
Flangia uscita

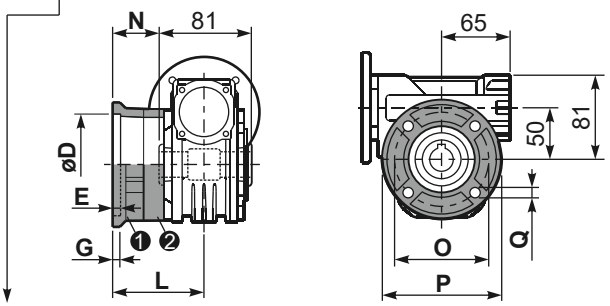

type **B**	øD	E	G	L	N	O	P	Q	kit code
FC	$70^{+0.20}_{+0.15}$	9	12	85	44.5	90	123	10.5	❶ K050.9.010 ❷ -
FL	$70^{+0.20}_{+0.15}$	9	12	114.5	74	90	123	10.5	❶ K050.9.010 ❷ K050.0.200

type **S**	øD	E	G	L	N	O	P	Q	kit code
F1	$110^{+0.20}_{+0.15}$	4	11	83.5	43	130	160	10	❶ KS050.9.012 ❷ -
F2	$70^{+0.20}_{+0.15}$	9	12	76.5	36	90	123	10.5	❶ KS050.9.014 ❷ -
F3	$95^{+0.035}_{0}$	4	10	66.5	26	115	140	10	❶ KS050.9.013 ❷ -

R050FB... Input shaft
Albero in entrata

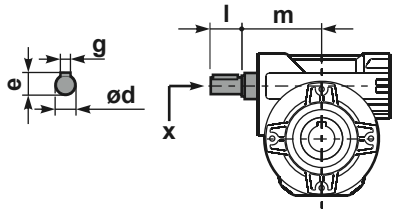

	ød	e	g	l	m	x	kit code
type **B**	16 h6	18	5	30	74.5	M6x16	❶ K050.5.006 PAM71 ❷ K050.5.007 PAM80
type **S**	14 h6	16	5	30	74.5	M5x10	❶ KS050.5.008 PAM71 ❷ KS050.5.009 PAM80

P050**BR**... Reaction arm
Braccio di reazione

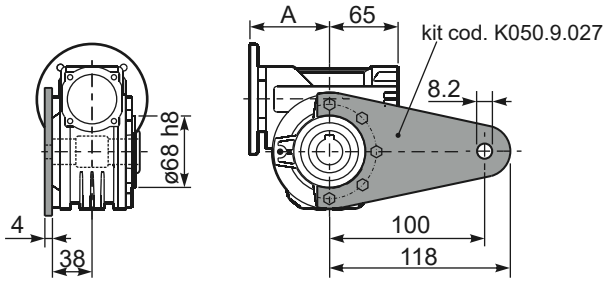

P050.....**S**... Single Shaft
Albero lento semplice

P050.....**D**... Double Shaft
Albero lento bisp.

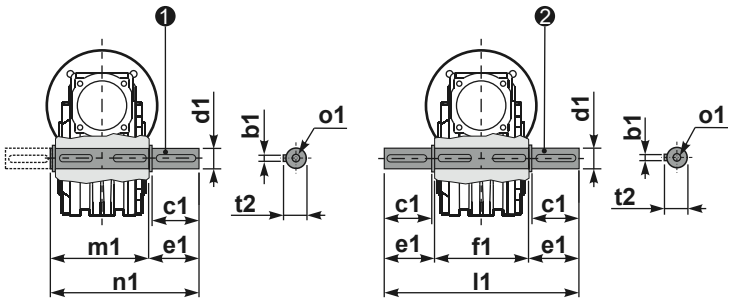

❶ kit cod. K050.5.028 type **B**
kit cod. KS050.5.030 type **S**

❷ kit cod. K050.5.029 type **B**

	b1	c1	d1	e1	f1	l1	m1	n1	t2	o1
type **B**	8	52	$25^{-0.005}_{-0.020}$	59.5	81	200	86.5	146	28	M8x20
type **S**	8	50	$24^{-0.005}_{-0.020}$	68.8	-	-	86.5	155	27	M8x20