Technical Data Sheet
Gearbox
WORM GEARBOX ROUND DESIGN

| | | |
|---|---|---|
| MODEL | 050 | |
| Ø OUTPUT SHAFT | 25 | mm |
| APPROXIMATE RATIO | 70 | |
| EXACT RATIO | 68.00 | |
| OUTPUT SPEED | 21 | RPM |
| EXACT OUTPUT SPEED | 21 | RPM |
| INPUT POWER | 0.09 | KW |
| INPUT ROTATION | 1400 | RPM |
| INPUT PAM | 56B14 | |
| OUTPUT TORQUE | 23.79 | N.m |
| NOMINAL TORQUE | 58.00 | N.m |
| NOMINAL POWER | 0.22 | KW |
| SERVICE FACTOR | 2.44 | |
| DYNAMIC EFFICIENCY | 0.57 | |

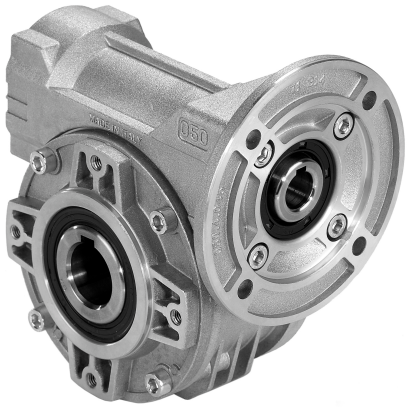

## Oil Quantity (L)

| B3/H1 | B6/H4 | B7/H3 | B8/H2 | V5/H5 | V6/H6 |
|---|---|---|---|---|---|
| 0.14 | 0.14 | 0.14 | 0.14 | 0.14 | 0.14 |

## Radial and Axial Loads

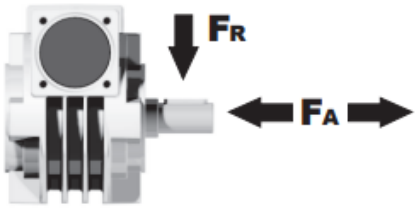


| $n_2$ [min-1] | FA [N] | FR [N] |
|---|---|---|
| 200 | 240 | 1200 |
| 100 | 300 | 1500 |
| 50 | 380 | 1900 |
| 15 | 560 | 2800 |

Universal Motors S.A.
Rua Comendador Brandão, 484
4495-375 Póvoa de Varzim
geral@universalmotors.pt
TEL.: 252 299 080

Universal Motors UK, Ltd
Unit E2, Meltham Mills Road
West Yorkshire HD9 4AR
enquiries@universalmotors-group.co.uk
TEL.: +44(0) 1484660222

Universal Motors SL
C/La Habana n.6 nave 4 Pl Camporroso
28806 Alcala de Henares
info@universalmotors-group.es
TEL.: 918 864 213

## P050**FB**... Basic wormbox
Riduttore base

| M. flanges | Kit code | øF | A |
|---|---|---|---|
| **63B5** | K050.4.041 | 138 | 78.5 |
| **71B5** | K050.4.042 | 160 | 76 |
| **80B5** | K050.4.043 | 200 | 76.5 |
| | | | |
| **56B14** | KC40.4.049 | 80 | 76 |
| **63B14** | K050.4.047 | 90 | 78.5 |
| **71B14** | K050.4.045 | 105 | 76 |
| **80B14** | K050.4.046 | 120 | 76.5 |

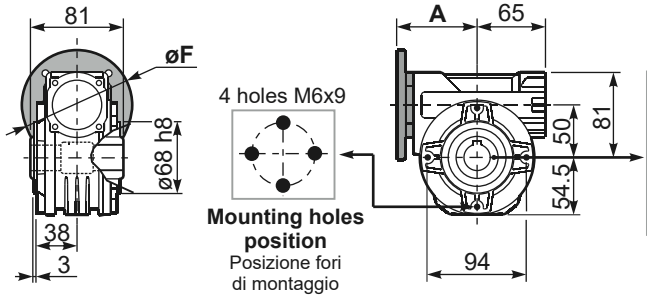


Gearbox weight / peso riduttore: **3.00 kg**

## P050**PA**... Feet
Piedini

## P050**PB**... Feet
Piedini

## P050**PV**... Feet
Piedini

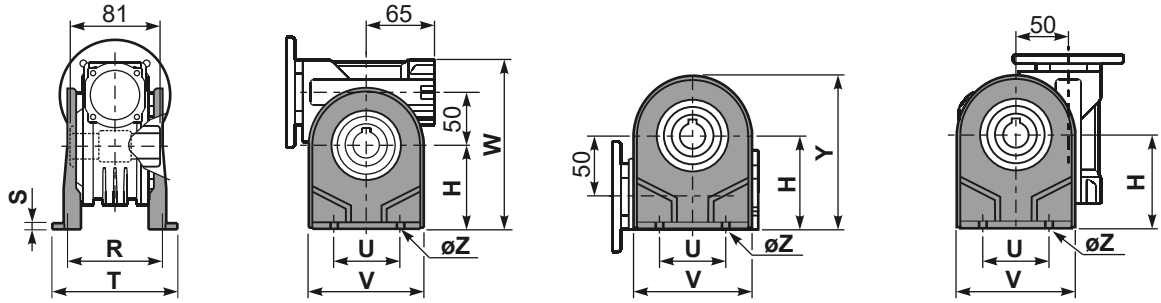


| | H | R | S | T | U | V | Y | W | øZ | kit code |
|---|---|---|---|---|---|---|---|---|---|---|
| type **B** | 82 | 98.5 | 3.5 | 123 | 63 | 113 | 138.5 | 163 | ø10.5 | K050.9.022 |
| type **S** | 85 | 96 | 10 | 114 | 85 | 110 | 139.5 | 166 | ø10 | KS050.9.023 |

## P050**FC**... Output flange
Flangia uscita

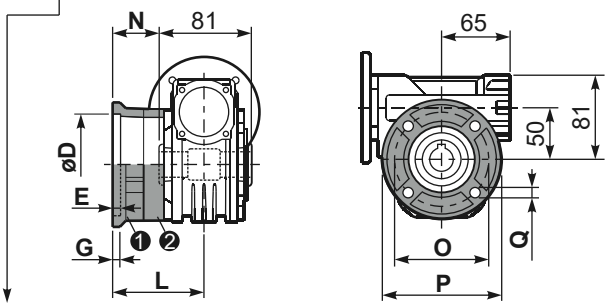


| type **B** | øD | E | G | L | N | O | P | Q | kit code |
|---|---|---|---|---|---|---|---|---|---|
| **FC** | $70^{+0.20}_{+0.15}$ | 9 | 12 | 85 | 44.5 | 90 | 123 | 10.5 | ❶ K050.9.010<br>❷ - |
| **FL** | $70^{+0.20}_{+0.15}$ | 9 | 12 | 114.5 | 74 | 90 | 123 | 10.5 | ❶ K050.9.010<br>❷ K050.0.200 |

| type **S** | øD | E | G | L | N | O | P | Q | kit code |
|---|---|---|---|---|---|---|---|---|---|
| **F1** | $110^{+0.20}_{+0.15}$ | 4 | 11 | 83.5 | 43 | 130 | 160 | 10 | ❶ KS050.9.012<br>❷ - |
| **F2** | $70^{+0.20}_{+0.15}$ | 9 | 12 | 76.5 | 36 | 90 | 123 | 10.5 | ❶ KS050.9.014<br>❷ - |
| **F3** | $95^{+0.035}_{0}$ | 4 | 10 | 66.5 | 26 | 115 | 140 | 10 | ❶ KS050.9.013<br>❷ - |

## **R**050FB... Input shaft
Albero in entrata

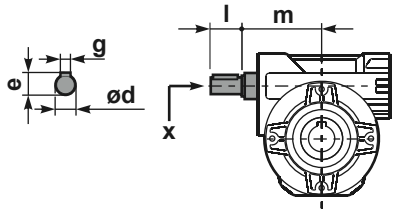


| | ød | e | g | l | m | x | kit code |
|---|---|---|---|---|---|---|---|
| type **B** | 16 h6 | 18 | 5 | 30 | 74.5 | M6x16 | ❶ K050.5.006 PAM71<br>❷ K050.5.007 PAM80 |
| type **S** | 14 h6 | 16 | 5 | 30 | 74.5 | M5x10 | ❶ KS050.5.008 PAM71<br>❷ KS050.5.009 PAM80 |

## P050**BR**... Reaction arm
Braccio di reazione

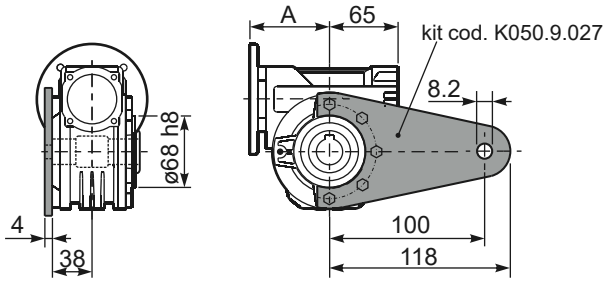


## P050.....**S**... Single Shaft
Albero lento semplice

## P050.....**D**... Double Shaft
Albero lento bisp.

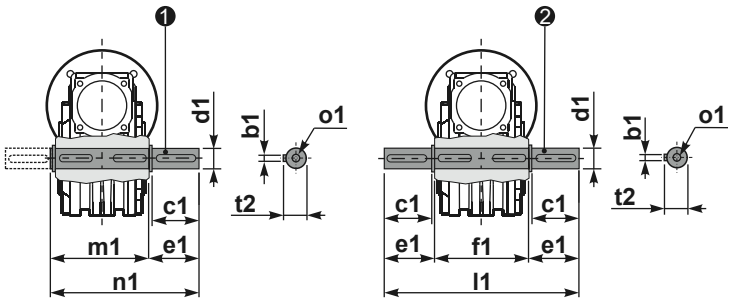


❶ kit cod. K050.5.028 type **B**
kit cod. KS050.5.030 type **S**

❷ kit cod. K050.5.029 type **B**

| | b1 | c1 | d1 | e1 | f1 | l1 | m1 | n1 | t2 | o1 |
|---|---|---|---|---|---|---|---|---|---|---|
| type **B** | 8 | 52 | $25^{-0.005}_{-0.020}$ | 59.5 | 81 | 200 | 86.5 | 146 | 28 | M8x20 |
| type **S** | 8 | 50 | $24^{-0.005}_{-0.020}$ | 68.8 | - | - | 86.5 | 155 | 27 | M8x20 |