Technical Data Sheet
Gearbox
WORM GEARBOX ROUND DESIGN

MODEL	110	
Ø OUTPUT SHAFT	42	mm
APPROXIMATE RATIO	50	
EXACT RATIO	53.00	
OUTPUT SPEED	29	RPM
EXACT OUTPUT SPEED	28	RPM
INPUT POWER	1.10	KW
INPUT ROTATION	1400	RPM
INPUT PAM	90B14	
OUTPUT TORQUE	278.36	N.m
NOMINAL TORQUE	620.00	N.m
NOMINAL POWER	2.5	KW
SERVICE FACTOR	2.27	
DYNAMIC EFFICIENCY	0.70	

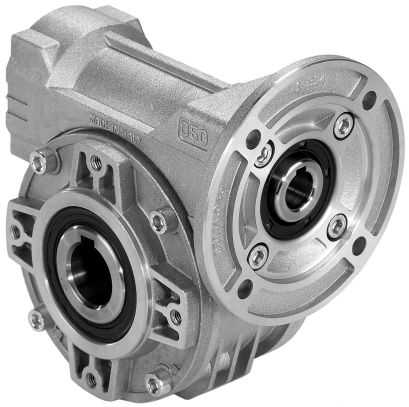

Oil Quantity (L)

B3/H1	B6/H4	B7/H3	B8/H2	V5/H5	V6/H6
1.9	1.35	1.35	2	2	2

Radial and Axial Loads

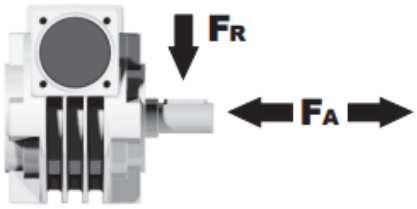

n_2 [min-1]	FA [N]	FR [N]
200	600	2900
100	750	3600
50	920	4600
15	1400	7000

Universal Motors S.A.
Rua Comendador Brandão, 484
4495-375 Póvoa de Varzim
geral@universalmotors.pt
TEL.: 252 299 080

Universal Motors UK, Ltd
Unit E2, Meltham Mills Road
West Yorkshire HD9 4AR
enquiries@universalmotors-group.co.uk
TEL.: +44(0) 1484660222

Universal Motors SL
C/La Habana n.6 nave 4 Pl Camporroso
28806 Alcala de Henares
info@universalmotors-group.es
TEL.: 918 864 213

P110**FB**... Basic wormbox
Riduttore base

M. flanges	Kit code	øF	A
71B5	K023.4.041	160	136
80/90B5	K023.4.042	200	138
100/112B5	K023.4.043	250	147
132B5	-	300	187
80B14	K085.4.046	120	138
90B14	K085.4.045	140	138
100/112B14	K023.4.041	160	136
132B14	-	200	187

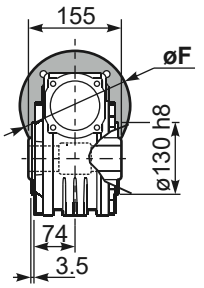

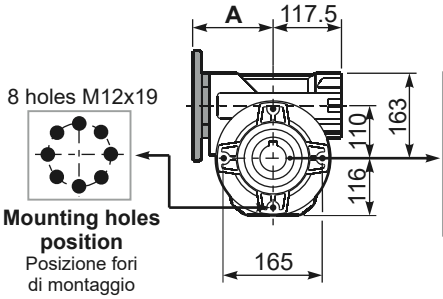

Mounting holes position
Posizione fori di montaggio

Standard
Hollow shaft

On request
A richiesta

Gearbox weight peso riduttore **35.00 kg**

P110**PA**... Feet
Piedini

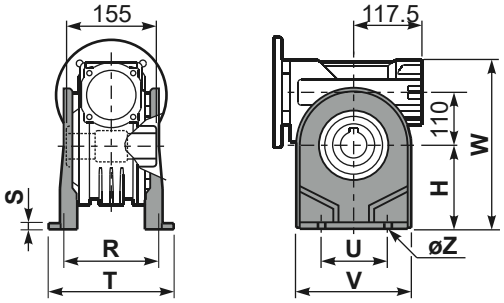

P110**PB**... Feet
Piedini

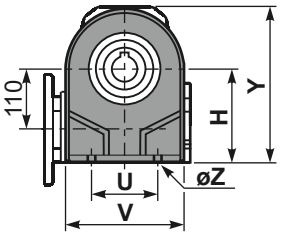

P110**PV**... Feet
Piedini

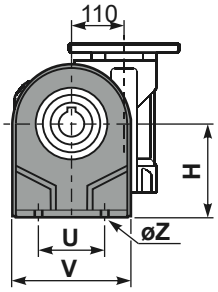

	H	R	S	T	U	V	Y	W	øZ	kit code
type **B**	170	180	8	224	200	240	286	333	ø13	K110.9.022
type **S**	-	-	-	-	-	-	-	-	-	-

P110**FC**... Output flange
Flangia uscita

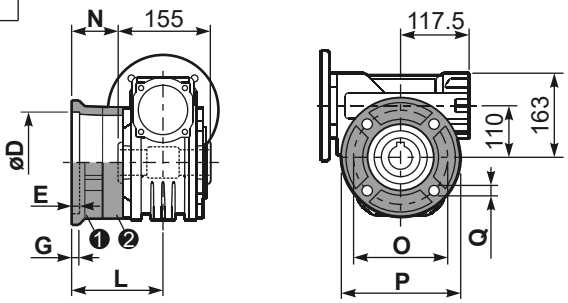

type **B**	øD	E	G	L	N	O	P	Q	kit code
FC	170 +0.083 +0.043	11	16.5	131.5	54	230	270	13	❶ K110.9.010 ❷ -
FL	170 +0.083 +0.043	11	16.5	179.5	102	230	270	13	❶ K110.9.011 ❷ -

type **S**	øD	E	G	L	N	O	P	Q	kit code
F1	180 +0.040 0	5	18	150	72.5	215	250	15	❶ KS110.9.014 ❷ -
F3	180 +0.040 0	5	18	130	52.5	215	250	15	❶ KS110.9.013 ❷ -

P110**BR**... Reaction arm
Braccio di reazione

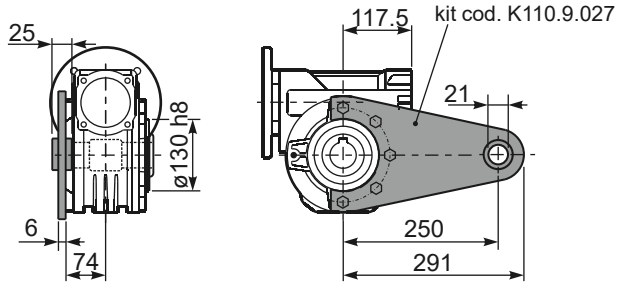

P110.....**S**... Single Shaft
Albero lento semplice

P110.....**D**... Double Shaft
Albero lento bisp.

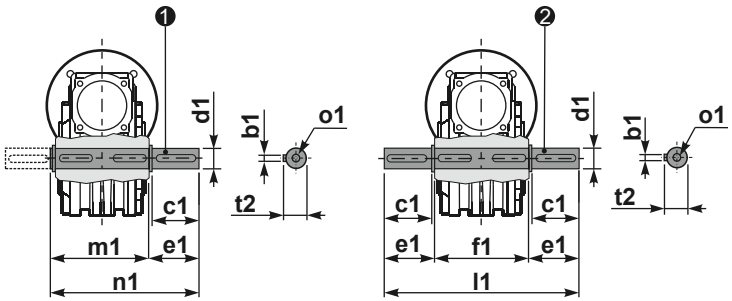

❶ kit cod. K110.5.028 type **B**

❷ kit cod. K110.5.029 type **B**

R110FB... Input shaft
Albero in entrata

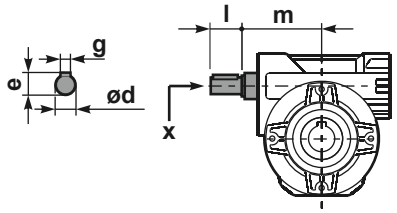

	ød	e	g	l	m	x	kit code
type **B**	25 h6	28	8	50	131.5	M8x20	❶ K085.5.007 PAM90 ❷ K085.5.008 PAM100
type **S**	24 h6	27	8	50	131.5	M8x20	❶ KS085.5.009 PAM90 ❷KS085.5.011 PAM100

	b1	c1	d1	e1	f1	l1	m1	n1	t2	o1
type **B**	12	75	42 -0.005 -0.020	96.5	155	348	163.5	260	45	M12x32
type **S**	-	-	-	-	-	-	-	-	-	-