Technical Data Sheet
Gearbox
# INLINE GEARBOX

| | | |
|---|---|---|
| MODEL | 211A | |
| Ø OUTPUT SHAFT | 14 | mm |
| APPROXIMATE RATIO | 2 | |
| EXACT RATIO | 2.05 | |
| OUTPUT SPEED | 730 | RPM |
| EXACT OUTPUT SPEED | 712 | RPM |
| INPUT POWER | 0.25 | KW |
| INPUT ROTATION | 1400 | RPM |
| INPUT PAM | 71B5 | |
| OUTPUT TORQUE | 3.22 | N.m |
| NOMINAL TORQUE | 10.00 | N.m |
| NOMINAL POWER | 0.73 | KW |
| SERVICE FACTOR | 2.92 | |
| DYNAMIC EFFICIENCY | 0.92 | |

## Oil Quantity (L)

| B3/H1 | B6/H4 | B7/H3 | B8/H2 | V5/H5 | V6/H6 |
|---|---|---|---|---|---|
| 0.05 | 0.05 | 0.05 | 0.05 | 0.05 | 0.05 |

## Radial and Axial Loads

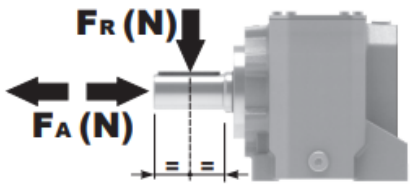


| $n_2$ [min-1] | FA [N] | FR [N] |
|---|---|---|
| 700 | 101 | 504 |
| 400 | 138 | 696 |
| 200 | 175 | 876 |
| 140 | 192 | 960 |

Universal Motors S.A.
Rua Comendador Brandão, 484
4495-375 Póvoa de Varzim
geral@universalmotors.pt
TEL.: 252 299 080

Universal Motors UK, Ltd
Unit E2, Meltham Mills Road
West Yorkshire HD9 4AR
enquiries@universalmotors-group.co.uk
TEL.: +44(0) 1484660222

Universal Motors SL
C/La Habana n.6 nave 4 Pl Camporroso
28806 Alcala de Henares
info@universalmotors-group.es
TEL.: 918 864 213

**P**211A-**F**... Basic wormbox
Riduttore base

| Gearbox weight peso riduttore | 1.40 kg |
|---|---|

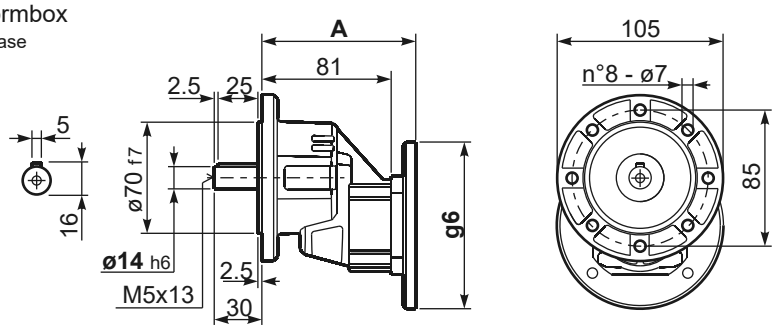


| B5 Motor Flanges | A | g6 | kit code |
|---|---|---|---|
| 63 B5 | 99.5 | 138 | K050.4.041 |
| 71 B5 | 97 | 160 | K050.4.042 |

| B14 Motor Flanges | A | g6 | kit code |
|---|---|---|---|
| 56 B14 | 97 | 80 | KC40.4.049 |
| 63 B14 | 99.5 | 90 | K050.4.047 |
| 71 B14 | 97 | 105 | K050.4.045 |

**R**211A-F... Basic wormbox
Riduttore base

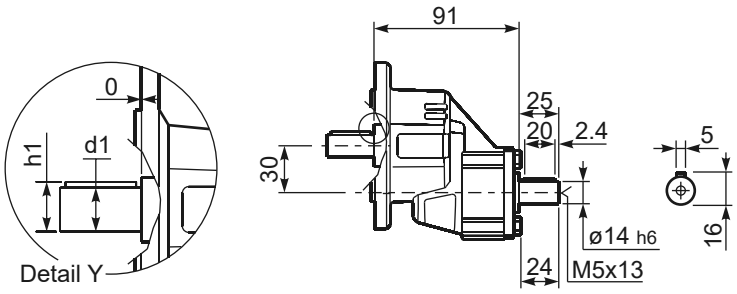


***Available output shaft** / Albero di uscita

| | Shaft - d1 | p1 | h1 | x |
|---|---|---|---|---|
| Standard | ø 14x30 | 5 | 16 | M5x13 |

4