Technical Data Sheet
Gearbox
INLINE GEARBOX

MODEL	211A	
Ø OUTPUT SHAFT	14	mm
APPROXIMATE RATIO	10	
EXACT RATIO	9.83	
OUTPUT SPEED	146	RPM
EXACT OUTPUT SPEED	149	RPM
INPUT POWER	0.12	KW
INPUT ROTATION	1400	RPM
INPUT PAM	63B5	
OUTPUT TORQUE	7.40	N.m
NOMINAL TORQUE	16.00	N.m
NOMINAL POWER	0.25	KW
SERVICE FACTOR	2.08	
DYNAMIC EFFICIENCY	0.92	

Oil Quantity (L)

B3/H1	B6/H4	B7/H3	B8/H2	V5/H5	V6/H6
0.05	0.05	0.05	0.05	0.05	0.05

Radial and Axial Loads

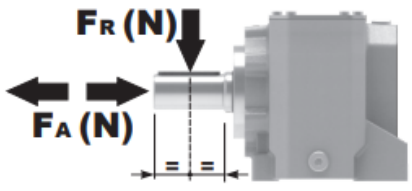

n_2 [min-1]	FA [N]	FR [N]
700	101	504
400	138	696
200	175	876
140	192	960

Universal Motors S.A.
Rua Comendador Brandão, 484
4495-375 Póvoa de Varzim
geral@universalmotors.pt
TEL.: 252 299 080

Universal Motors UK, Ltd
Unit E2, Meltham Mills Road
West Yorkshire HD9 4AR
enquiries@universalmotors-group.co.uk
TEL.: +44(0) 1484660222

Universal Motors SL
C/La Habana n.6 nave 4 Pl Camporroso
28806 Alcala de Henares
info@universalmotors-group.es
TEL.: 918 864 213

P211A-**F**... Basic wormbox
Riduttore base

Gearbox weight peso riduttore	1.40 kg

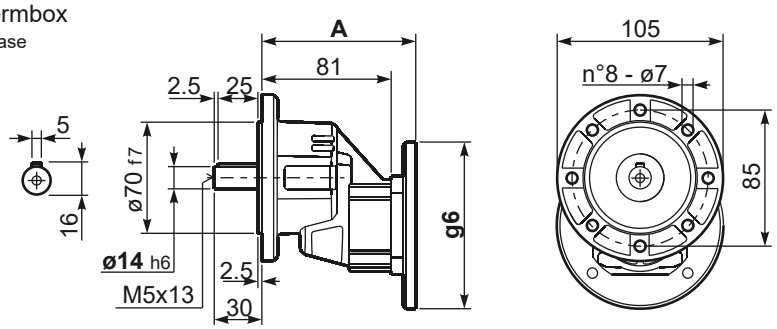

B5 Motor Flanges	A	g6	kit code
63 B5	99.5	138	K050.4.041
71 B5	97	160	K050.4.042

B14 Motor Flanges	A	g6	kit code
56 B14	97	80	KC40.4.049
63 B14	99.5	90	K050.4.047
71 B14	97	105	K050.4.045

R211A-F... Basic wormbox
Riduttore base

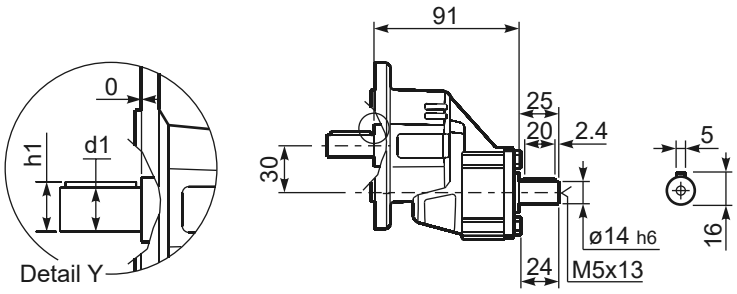

***Available output shaft** / Albero di uscita

	Shaft - d1	p1	h1	x
Standard	ø 14x30	5	16	M5x13

4