Technical Data Sheet
Gearbox
INLINE GEARBOX

MODEL	311A	
Ø OUTPUT SHAFT	14	mm
APPROXIMATE RATIO	3	
EXACT RATIO	2.84	
OUTPUT SPEED	487	RPM
EXACT OUTPUT SPEED	514	RPM
INPUT POWER	0.37	KW
INPUT ROTATION	1400	RPM
INPUT PAM	71B14	
OUTPUT TORQUE	6.59	N.m
NOMINAL TORQUE	23.00	N.m
NOMINAL POWER	1.2	KW
SERVICE FACTOR	3.24	
DYNAMIC EFFICIENCY	0.92	

Oil Quantity (L)

B3/H1	B6/H4	B7/H3	B8/H2	V5/H5	V6/H6
0.1	0.1	0.1	0.1	0.1	0.1

Radial and Axial Loads

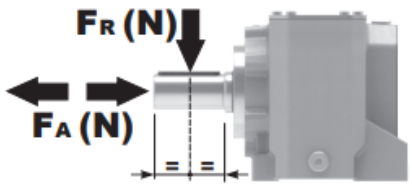

n_2 [min-1]	FA [N]	FR [N]
700	120	640
400	160	800
200	200	1020
140	225	1120

Universal Motors S.A.
Rua Comendador Brandão, 484
4495-375 Póvoa de Varzim
geral@universalmotors.pt
TEL.: 252 299 080

Universal Motors UK, Ltd
Unit E2, Meltham Mills Road
West Yorkshire HD9 4AR
enquiries@universalmotors-group.co.uk
TEL.: +44(0) 1484660222

Universal Motors SL
C/La Habana n.6 nave 4 Pl Camporroso
28806 Alcala de Henares
info@universalmotors-group.es
TEL.: 918 864 213

Gearbox weight peso riduttore	2.50 kg

P311-F... Output flange
flange di uscita

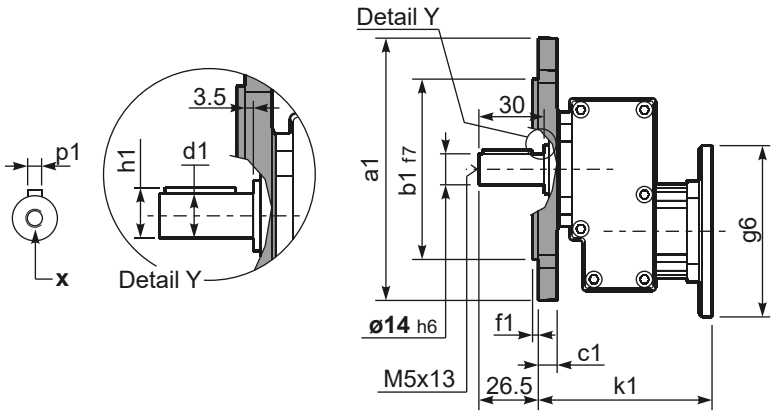

***Available output shaft** / Albero di uscita

	Shaft - d1	p1	h1	x
Standard	ø 14x30	5	16	M5x13
On request A richiesta	ø 19x40 ø 24x40	6 8	21.5 27	M6x16 M6x16

Available output flanges / flange di uscita

a1 ø	b1	c1	e1	f1	s1	kit code
120	80	11.5	100	3	9*	KC30.9.010
140	95	11.5	115	3	9	KC30.9.011
160	110	11.5	130	3.5	9	KC30.9.012
200	130	11.5	165	3.5	11	KC30.9.013

*Holes position
posizione fori

P311-H1... With feet
Con piedini

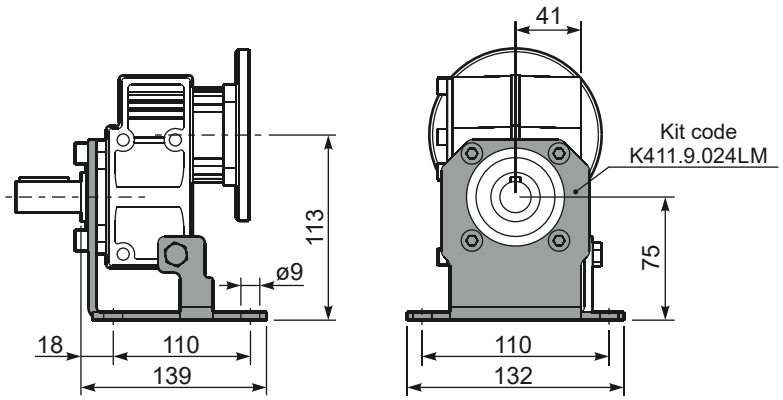

R311-N... Input Shaft
Albero in entrata

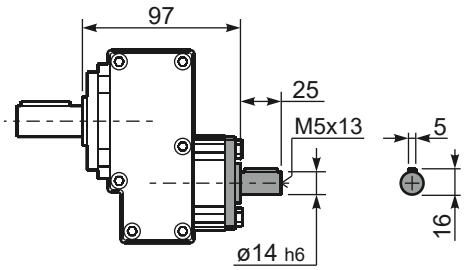

P311-N... Basic gearbox
Riduttore base

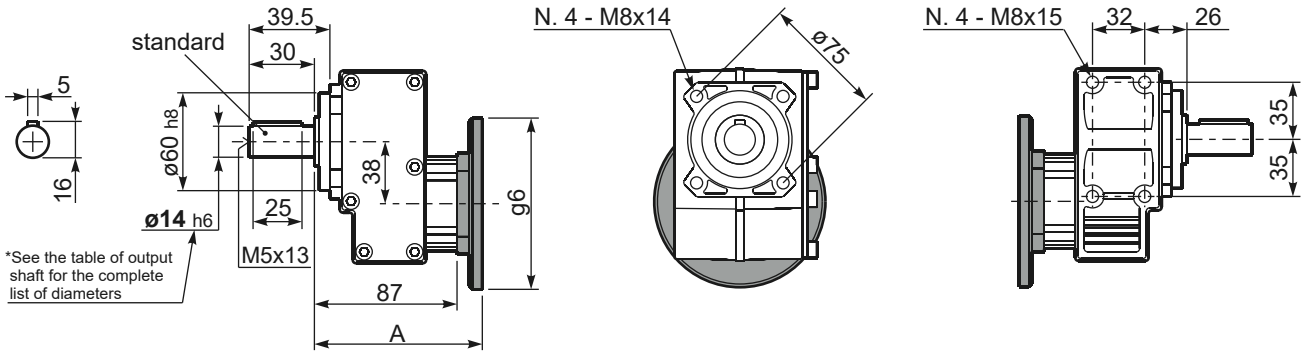

B14 Motor Flanges	A	g6	k1	kit code
56 B14	103	80	106.5	KC40.4.049
63 B14	105.5	90	109	K050.4.047
71 B14	103	105	106.5	K050.4.045

B5 Motor Flanges	A	g6	k1	kit code
63 B5	105.5	138	109	K050.4.041
71 B5	103	160	106.5	K050.4.042