Technical Data Sheet
Gearbox
INLINE GEARBOX

MODEL	411A	
Ø OUTPUT SHAFT	19	mm
APPROXIMATE RATIO	3.5	
EXACT RATIO	3.29	
OUTPUT SPEED	417	RPM
EXACT OUTPUT SPEED	444	RPM
INPUT POWER	0.75	KW
INPUT ROTATION	1400	RPM
INPUT PAM	80B14	
OUTPUT TORQUE	15.48	N.m
NOMINAL TORQUE	38.00	N.m
NOMINAL POWER	1.7	KW
SERVICE FACTOR	2.27	
DYNAMIC EFFICIENCY	0.92	

Oil Quantity (L)

B3/H1	B6/H4	B7/H3	B8/H2	V5/H5	V6/H6
0.1	0.1	0.1	0.1	0.1	0.1

Radial and Axial Loads

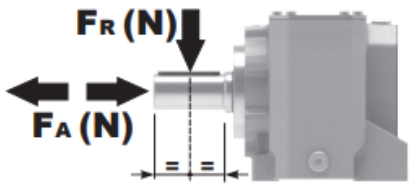

n_2 [min-1]	FA [N]	FR [N]
700	182	910
400	230	1150
200	290	1450
140	320	1600

Universal Motors S.A.
Rua Comendador Brandão, 484
4495-375 Póvoa de Varzim
geral@universalmotors.pt
TEL.: 252 299 080

Universal Motors UK, Ltd
Unit E2, Meltham Mills Road
West Yorkshire HD9 4AR
enquiries@universalmotors-group.co.uk
TEL.: +44(0) 1484660222

Universal Motors SL
C/La Habana n.6 nave 4 Pl Camporroso
28806 Alcala de Henares
info@universalmotors-group.es
TEL.: 918 864 213

P411-F... Output flange
flange di uscita

Gearbox weight peso riduttore	3.20 kg

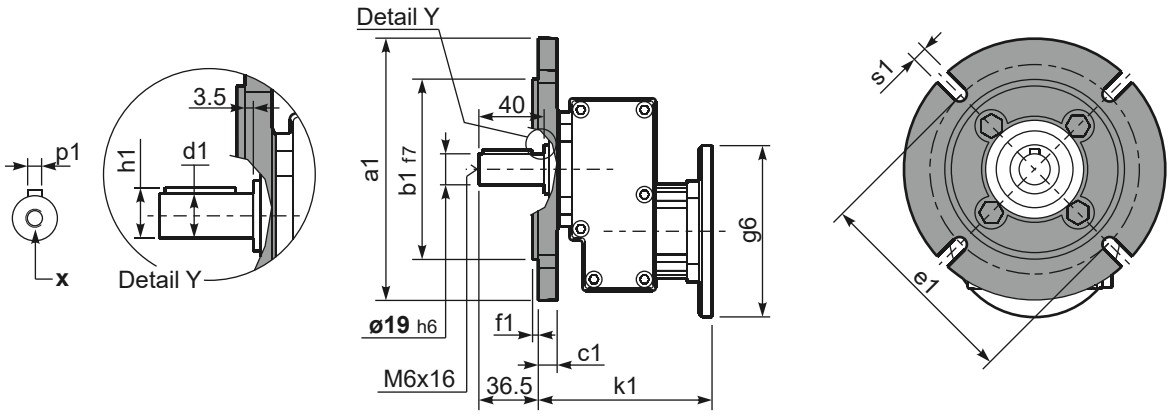

***Available output shaft** / Albero di uscita

	Shaft - d1	p1	h1	x
Standard	ø 19x40	6	21.5	M6x16
On request A richiesta	ø 14x30 ø 24x40	5 8	16 27	M5x13 M6x16

Available output flanges / flange di uscita

a1 ø	b1	c1	e1	f1	s1	kit code
120	80	11.5	100	3	9*	KC30.9.010
140	95	11.5	115	3	9	KC30.9.011
160	110	11.5	130	3.5	9	KC30.9.012
200	130	11.5	165	3.5	11	KC30.9.013

*Holes position
posizione fori

P411-H1... With feet
Con piedini

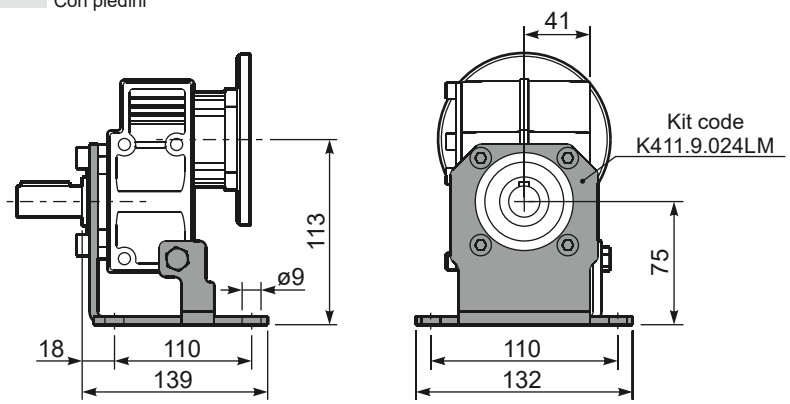

R411-N... Input Shaft
Albero in entrata

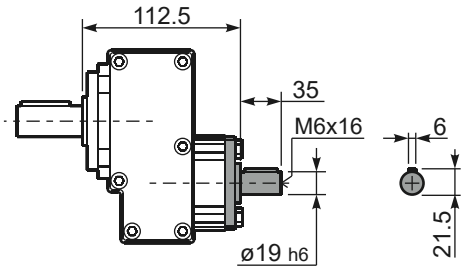

P411-N... Basic gearbox
Riduttore base

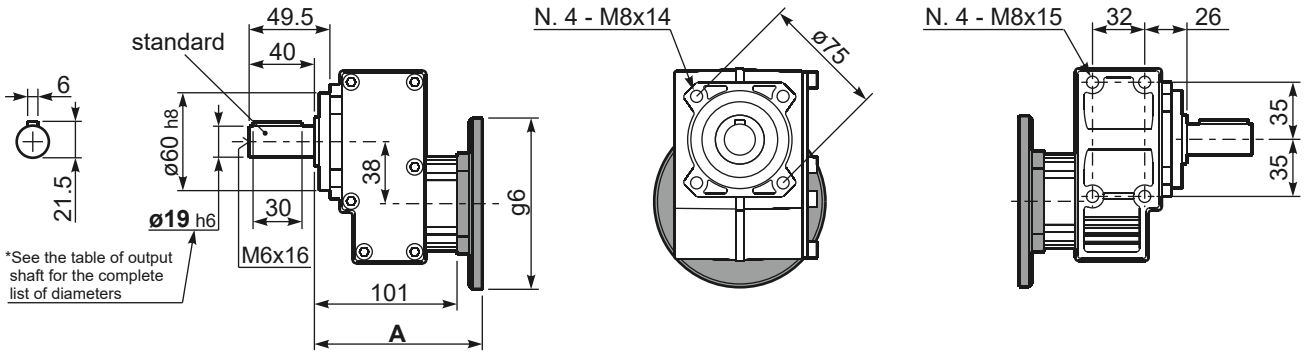

B5 Motor Flanges	A	g6	k1	kit code
63 B5	121.5	140	125	K063.4.041
71 B5	119.5	160	123	K063.4.042
80/90 B5	121.5	200	125	K063.4.043

B14 Motor Flanges	A	g6	k1	kit code
71 B14	119.5	105	123	K063.4.047
80 B14	121.5	120	125	K063.4.046
90 B14	121.5	140	125	K063.4.041