Technical Data Sheet
Gearbox
INLINE GEARBOX

MODEL	202A	
Ø OUTPUT SHAFT	16	mm
APPROXIMATE RATIO	15	
EXACT RATIO	15.10	
OUTPUT SPEED	97	RPM
EXACT OUTPUT SPEED	97	RPM
INPUT POWER	0.12	KW
INPUT ROTATION	1400	RPM
INPUT PAM	63B14	
OUTPUT TORQUE	11.87	N.m
NOMINAL TORQUE	60.00	N.m
NOMINAL POWER	0.61	KW
SERVICE FACTOR	5.08	
DYNAMIC EFFICIENCY	0.96	

Oil Quantity (L)

B3/H1	B6/H4	B7/H3	B8/H2	V5/H5	V6/H6
0.15	0.15	0.15	0.15	0.15	0.15

Radial and Axial Loads

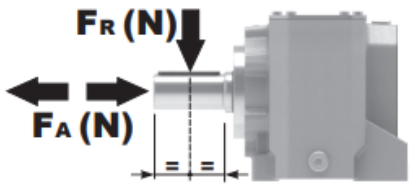

n_2 [min-1]	FA [N]	FR [N]
300	140	700
200	185	924
120	270	1350
70	340	1700

Universal Motors S.A.
Rua Comendador Brandão, 484
4495-375 Póvoa de Varzim
geral@universalmotors.pt
TEL.: 252 299 080

Universal Motors UK, Ltd
Unit E2, Meltham Mills Road
West Yorkshire HD9 4AR
enquiries@universalmotors-group.co.uk
TEL.: +44(0) 1484660222

Universal Motors SL
C/La Habana n.6 nave 4 Pl Camporroso
28806 Alcala de Henares
info@universalmotors-group.es
TEL.: 918 864 213

Gearbox weight peso riduttore	With flange 3.3 kg With feet 3.7 Kg

P202A**B1**... With feet / Con piedini

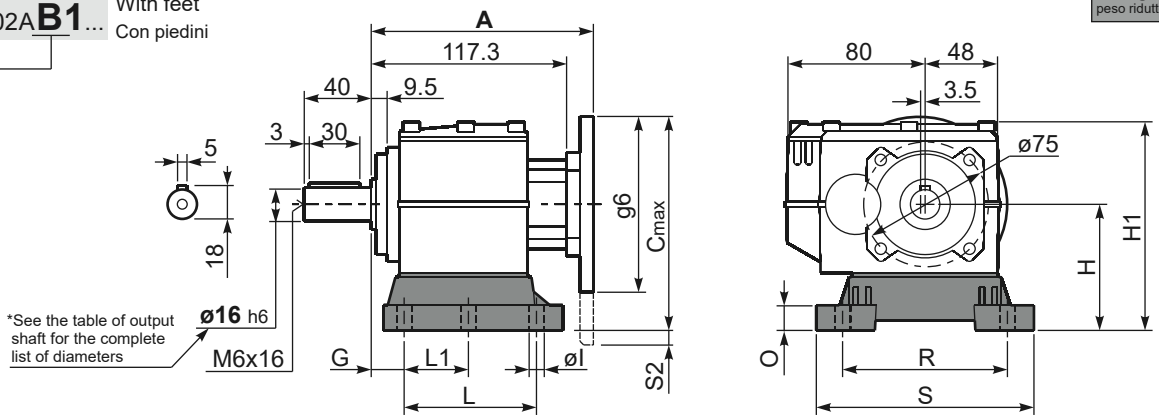

Feet Code	Market reference	G	H	R	L	L1	S	H1	O	øl	S2 only with motor flange	B5 max. Flange	kit code
B1	112	18	85	110	87	50	130	133	15	9	-	-	KC30.9.022
B2	212/3	18	100	130	107.5	60	155	145	5	11	-	-	KC30.9.023LM
S1	17-32	18	75	110	110	50	130	123	15	9	-	63B5	KC30.9.024

Other feet are available, see our web site
Sono disponibili altri piedini, consulta il nostro sito web

A see on page bottom

Most popular types
Tipi più diffusi

P202A-**F**... Output flanges / flange di uscita

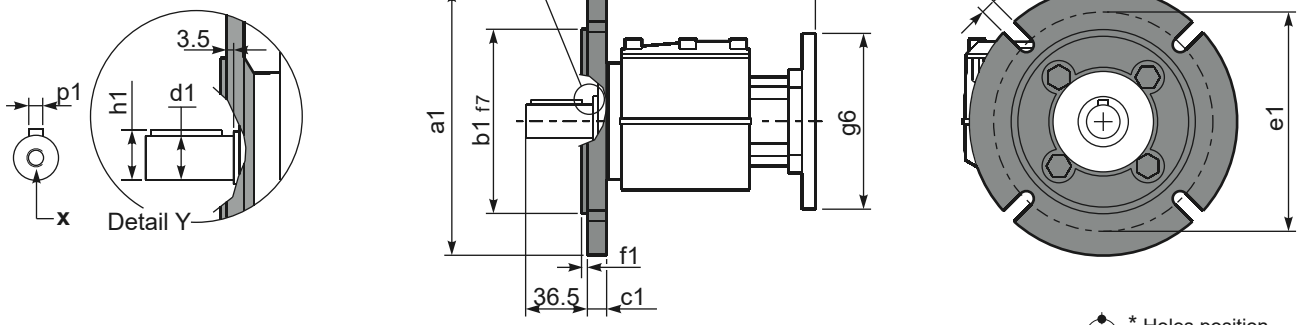

***Available output shaft** / Albero di uscita

	Shaft - d1	p1	h1	x
Standard	ø 16x40	5	18	M6x16
On request A richiesta	ø 14x30 ø 20x40 ø 25x50	5 6 8	16 22.5 28	M6x16 M8x19 M8x19

* Holes position
Posizione fori

Available output flanges / flange di uscita

a1 ø	b1	c1	e1	f1	s1	kit code	
120	80	11.5	100	3	9*	KC30.9.010	With flange and feet only on request. Ask for compatibility
140	95	11.5	115	3	9	KC30.9.011	
160	110	11.5	130	3.5	9	KC30.9.012	
200	130	11.5	165	3.5	11	KC30.9.013	

P202A-**N**... Basic gearbox / Riduttore base

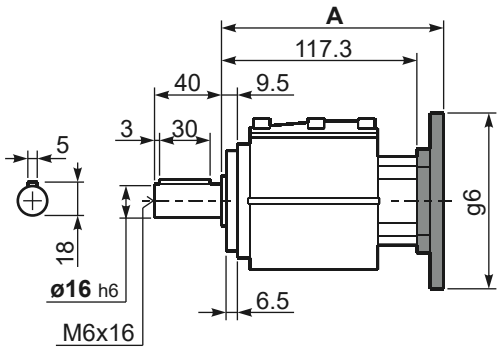

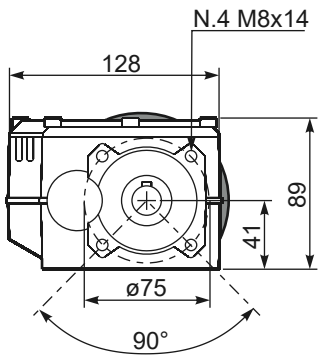

B5 Motor Flanges	A	C_{max}	g6	k1	kit code
63 B5	135.8	170	140	139.3	K050.4.041
71 B5	133.3	180	160	136.8	K050.4.042

B14 Motor Flanges	A	C_{max}	g6	k1	kit code
56 B14	133.3	139	80	136.8	KC40.4.049
63 B14	135.8	146	90	139.3	K050.4.047
71 B14	133.3	152.5	105	136.8	K050.4.045

R202A-**N**... Input Shaft / Albero in entrata

