Technical Data Sheet
Gearbox
INLINE GEARBOX

MODEL	302A	
Ø OUTPUT SHAFT	20	mm
APPROXIMATE RATIO	8	
EXACT RATIO	7.74	
OUTPUT SPEED	183	RPM
EXACT OUTPUT SPEED	189	RPM
INPUT POWER	0.75	KW
INPUT ROTATION	1400	RPM
INPUT PAM	80B5	
OUTPUT TORQUE	38.01	N.m
NOMINAL TORQUE	80.00	N.m
NOMINAL POWER	1.6	KW
SERVICE FACTOR	2.13	
DYNAMIC EFFICIENCY	0.96	

Oil Quantity (L)

B3/H1	B6/H4	B7/H3	B8/H2	V5/H5	V6/H6
0.15	0.15	0.15	0.15	0.15	0.15

Radial and Axial Loads

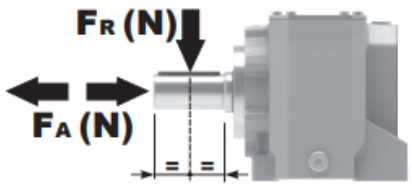

n_2 [min-1]	FA [N]	FR [N]
300	140	700
200	185	924
120	270	1350
70	340	1700

Universal Motors S.A.
Rua Comendador Brandão, 484
4495-375 Póvoa de Varzim
geral@universalmotors.pt
TEL.: 252 299 080

Universal Motors UK, Ltd
Unit E2, Meltham Mills Road
West Yorkshire HD9 4AR
enquiries@universalmotors-group.co.uk
TEL.: +44(0) 1484660222

Universal Motors SL
C/La Habana n.6 nave 4 Pl Camporroso
28806 Alcala de Henares
info@universalmotors-group.es
TEL.: 918 864 213

Gearbox weight peso riduttore	With flange 3.5 kg With feet 4.0 Kg

P302A**B1**... With feet
Con piedini

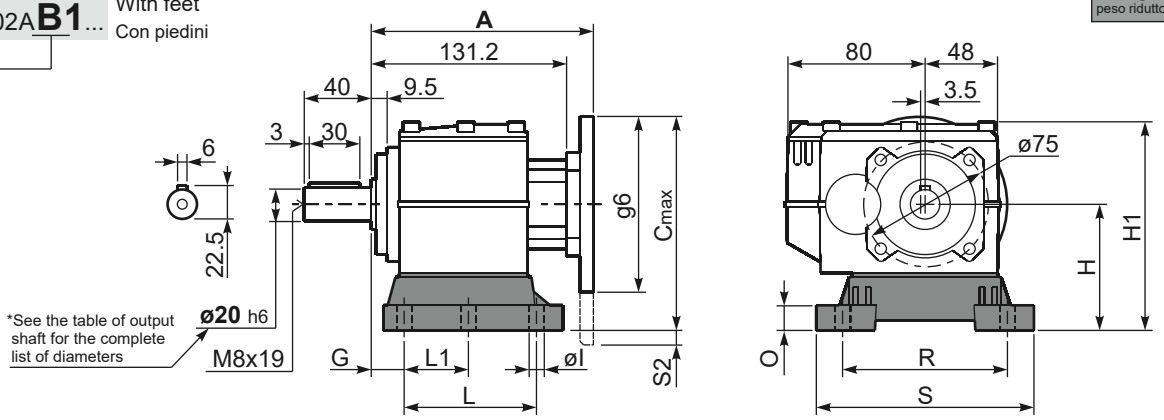

Feet Code	Market reference	G	H	R	L	L1	S	H1	O	øl	S2 only with motor flange	B5 max. Flange	kit code
B1	112	18	85	110	87	50	130	133	15	9	15 80/90B5	-	KC30.9.022
B2	212/3	18	100	130	107.5	60	155	145	5	11	3.5 80/90B5	-	KC30.9.023LM
S1	17-32	18	75	110	110	50	130	123	15	9	5 71B5	71B5	KC30.9.024

Other feet are available, see our web site
Sono disponibili altri piedini, consulta il nostro sito web

A see on page bottom

Most popular types
Tipi più diffusi

P302A-**F**... Output flanges
flange di uscita

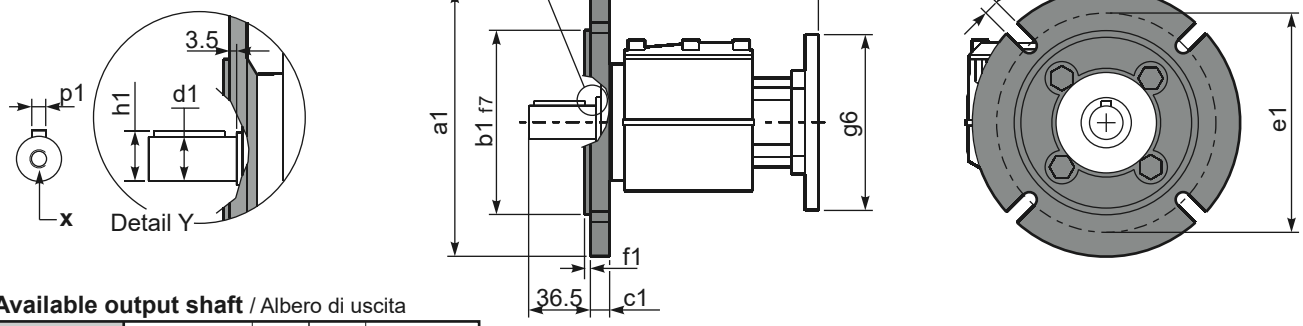

***Available output shaft** / Albero di uscita

	Shaft - d1	p1	h1	x
Standard	ø 20x40	6	22.5	M8x19
On request A richiesta	ø 14x30 ø 16x40 ø 19x40 ø 24x50 ø 25x50	5 5 6 8 8	16 18 21.5 27 28	M6x16 M6x16 M6x16 M8x19 M8x19

* Holes position
Posizione fori

Available output flanges / flange di uscita

a1 ø	b1	c1	e1	f1	s1	kit code
120	80	11.5	100	3	9*	KC30.9.010
140	95	11.5	115	3	9	KC30.9.011
160	110	11.5	130	3.5	9	KC30.9.012
200	130	11.5	165	3.5	11	KC30.9.013

With flange and feet only on request. Ask for compatibility

P302A-**N**... Basic gearbox
Riduttore base

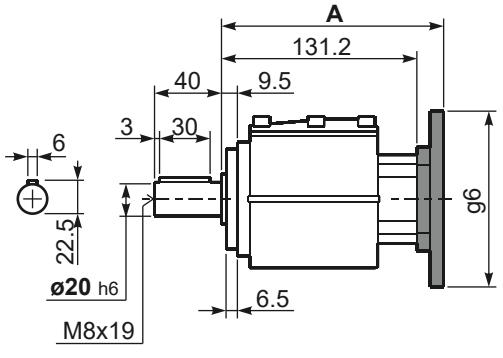

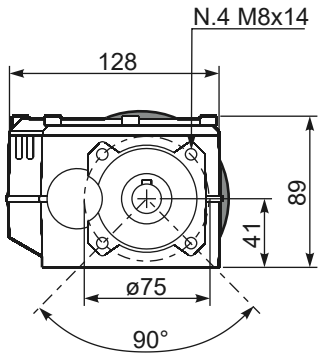

R302A-**N**... Input Shaft
Albero in entrata

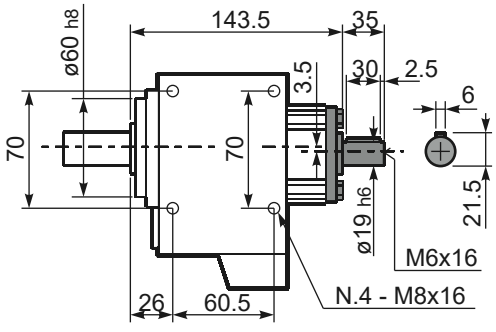

B5 Motor Flanges	A	C_{max}	g6	k1	kit code
63 B5	151.7	170	140	155.2	K063.4.041
71 B5	149.7	180	160	153.2	K063.4.042
80/90 B5	151.7	200	200	155.2	K063.4.043

B14 Motor Flanges	A	C_{max}	g6	k1	kit code
71 B14	149.7	152.5	105	153.2	K063.4.047
80 B14	151.7	160	120	155.2	K063.4.046
90 B14	151.7	170	140	155.2	K063.4.041