Technical Data Sheet
Gearbox
INLINE GEARBOX

MODEL	413A	
Ø OUTPUT SHAFT	25	mm
APPROXIMATE RATIO	73	
EXACT RATIO	73.43	
OUTPUT SPEED	20	RPM
EXACT OUTPUT SPEED	20	RPM
INPUT POWER	0.12	KW
INPUT ROTATION	1400	RPM
INPUT PAM	63B14	
OUTPUT TORQUE	56.50	N.m
NOMINAL TORQUE	175.00	N.m
NOMINAL POWER	0.37	KW
SERVICE FACTOR	3.08	
DYNAMIC EFFICIENCY	0.94	

Oil Quantity (L)

B3/H1	B6/H4	B7/H3	B8/H2	V5/H5	V6/H6
0.3	0.35	0.45	0.45	0.45	0.55

Radial and Axial Loads

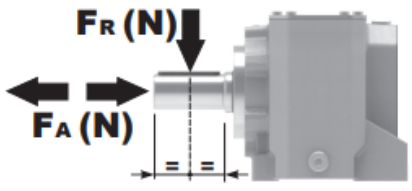

n_2 [min-1]	FA [N]	FR [N]
300	310	1550
200	360	1800
120	448	2240
70	540	2700

Universal Motors S.A.
Rua Comendador Brandão, 484
4495-375 Póvoa de Varzim
geral@universalmotors.pt
TEL.: 252 299 080

Universal Motors UK, Ltd
Unit E2, Meltham Mills Road
West Yorkshire HD9 4AR
enquiries@universalmotors-group.co.uk
TEL.: +44(0) 1484660222

Universal Motors SL
C/La Habana n.6 nave 4 Pl Camporroso
28806 Alcala de Henares
info@universalmotors-group.es
TEL.: 918 864 213

P413A**B1**... With feet
Con piedini

Gearbox weight peso riduttore	With flange **6.1 kg**
	With feet **6.3 Kg**

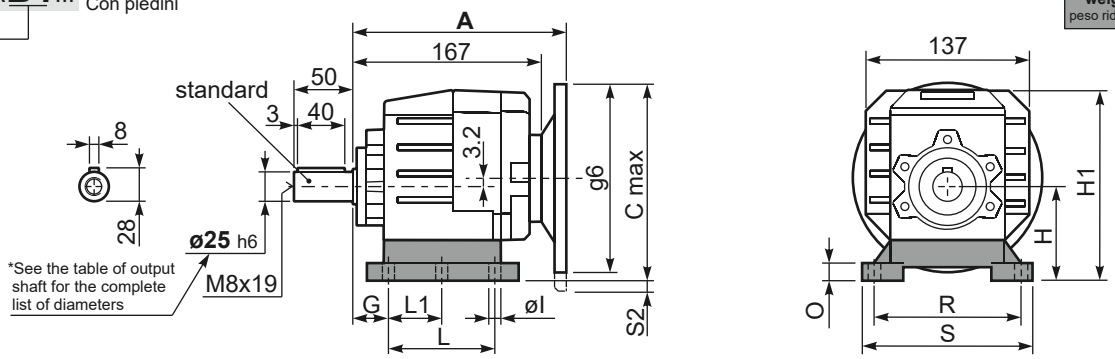

Feet / piedini

Feet Code	Market reference	G	H	R	L	L1	S	H1	O	øl	S2 only with motor flange	B5 max. Flange	kit code
B1	112	18	85	110	87	50	130	167.5	15	-	-	-	KC35.9.021
B2	212/3	18	100	130	107.5	60	155	182.5	17	11	-	-	KC40.9.025
S1	17	18	75	110	90÷110	50	145	155.5	15	9	2 80/90B5	-	KC40.9.022
S2	27	25	90	110	130	-	145	172.5	20	9	-	-	KC40.9.024
H2	022-223	25	100	110	115	-	145	182.5	20	9	-	-	KC40.9.026
M1	42/3	25	80	110÷120	85		145	162.5	15	9			KC40.9.023

Other feet are available, see our web site
Sono disponibili altri piedini, consulta il nostro sito web

A see on page bottom

Most popular types
Tipi più diffusi

P413A**-F**... Output flanges
flange di uscita

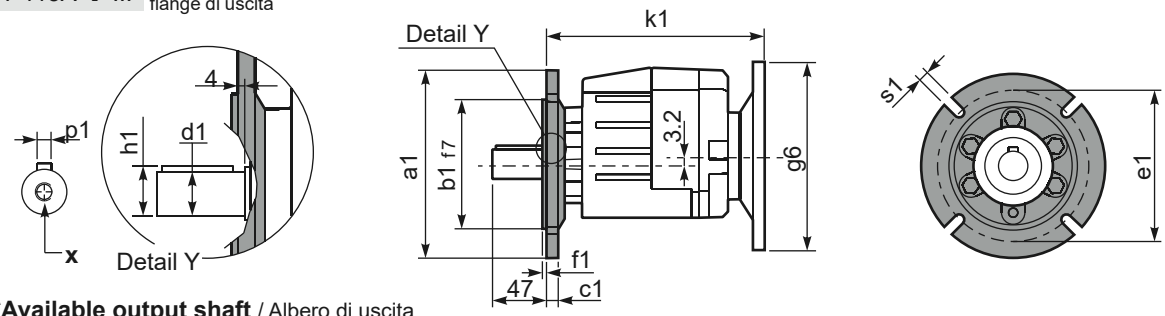

***Available output shaft** / Albero di uscita

	Shaft - d1	p1	h1	x
Standard	ø 25x50	8	28	M8x19
On request A richiesta	ø 16x40 ø 19x40 ø 20x40 ø 24x50	5 6 6 8	18 21.5 22.5 27	M6x16 M6x16 M8x19 M8x19

Available output flanges / flange di uscita

a1 ø	b1	c1	e1	f1	s1	kit code
120	80	10	100	3	7	KC40.9.010
140	95	10	115	3	9	KC40.9.011
160	110	10	130	3.5	9	KC40.9.012
200	130	10	165	3.5	11	KC40.9.013
250	180	11.5	215	3.5	14	KC40.9.014

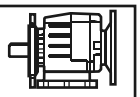

With flange and feet only on request. Ask for compatibility

P413A**-N**... Basic gearbox
Riduttore base

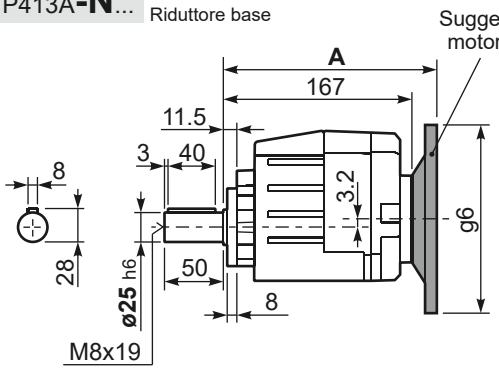

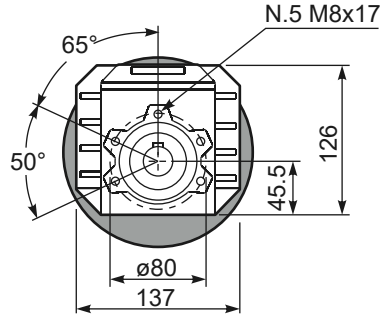

R413A**-N**... Input Shaft
Albero in entrata

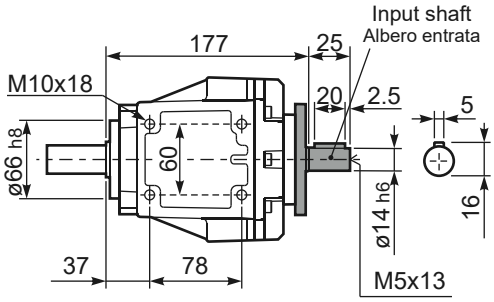

B5 Motor Flanges	A	C_{max}	g6	k1	kit code
63 B5	185.5	173.2	140	189.5	K050.4.041
71 B5	183	183.2	160	187	K050.4.042

B14 Motor Flanges	A	C_{max}	g6	k1	kit code
56 B14	183	143.2	80	187	KC40.4.049
63 B14	185.5	148.2	90	189.5	K050.4.047
71 B14	183	155.7	105	187	K050.4.045