Technical Data Sheet
Gearbox
# INLINE GEARBOX

| | | |
|---|---|---|
| MODEL | 513A | |
| Ø OUTPUT SHAFT | 30 | mm |
| APPROXIMATE RATIO | 47 | |
| EXACT RATIO | 47.22 | |
| OUTPUT SPEED | 31 | RPM |
| EXACT OUTPUT SPEED | 31 | RPM |
| INPUT POWER | 0.55 | KW |
| INPUT ROTATION | 1400 | RPM |
| INPUT PAM | 80B5 | |
| OUTPUT TORQUE | 166.52 | N.m |
| NOMINAL TORQUE | 354.00 | N.m |
| NOMINAL POWER | 1.2 | KW |
| SERVICE FACTOR | 2.18 | |
| DYNAMIC EFFICIENCY | 0.94 | |

## Oil Quantity (L)

| B3/H1 | B6/H4 | B7/H3 | B8/H2 | V5/H5 | V6/H6 |
|---|---|---|---|---|---|
| 1 | 0.9 | 1.74 | 1.15 | 1.45 | 1.4 |

## Radial and Axial Loads

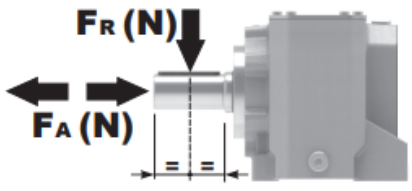


| $n_2$ [min-1] | FA [N] | FR [N] |
|---|---|---|
| 300 | 460 | 2300 |
| 200 | 520 | 2600 |
| 120 | 620 | 3100 |
| 15 | 1000 | 5000 |

Universal Motors S.A.
Rua Comendador Brandão, 484
4495-375 Póvoa de Varzim
geral@universalmotors.pt
TEL.: 252 299 080

Universal Motors UK, Ltd
Unit E2, Meltham Mills Road
West Yorkshire HD9 4AR
enquiries@universalmotors-group.co.uk
TEL.: +44(0) 1484660222

Universal Motors SL
C/La Habana n.6 nave 4 Pl Camporroso
28806 Alcala de Henares
info@universalmotors-group.es
TEL.: 918 864 213

P513A**B1**... With feet
Con piedini

**Gearbox weight** / peso riduttore: With flange **11.9 kg**, With feet **12.1 Kg**

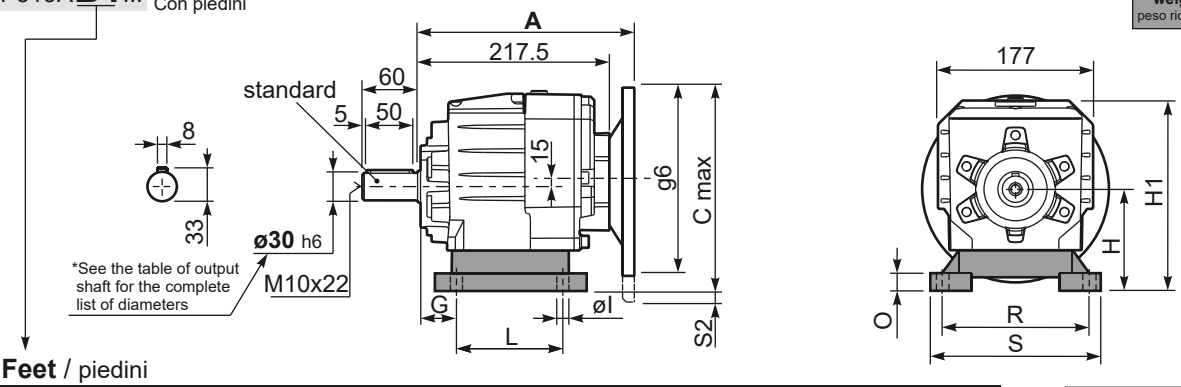


**Feet** / piedini

| Feet Code | Market reference | G | H | R | L | S | H1 | O | øl | S2 only with motor flange | B5 max. Flange | kit code |
|---|---|---|---|---|---|---|---|---|---|---|---|---|
| **B3** | 312/3 | 18 | 110 | 160 | 130 | 190 | 211 | 20 | 11 | - | - | KC50.9.024 |
| **B4** | 30/35 | 20 | 130 | 180 | 149.5 | 216 | 231 | 18 | 14 | - | - | KC60.9.024 |
| **S4** | 47-57 | 30 | 115 | 135 | 165 | 170 | 216 | 25 | 14 | - | - | KC50.9.022 |
| **H3** | 023-233 | 30 | 130 | 135 | 135 | 185 | 231 | 25 | 14 | - | - | KC50.9.025 |
| **M2** | 52/3 | 30 | 110 | 135÷150 | 100 | 190 | 211 | 18 | 11 | - | - | KC50.9.023 |

Other feet are available, see our web site
Sono disponibili altri piedini, consulta il nostro sito web

**A see on page bottom**

Most popular types
Tipi più diffusi



P513A**-F**... Output flanges
flange di uscita

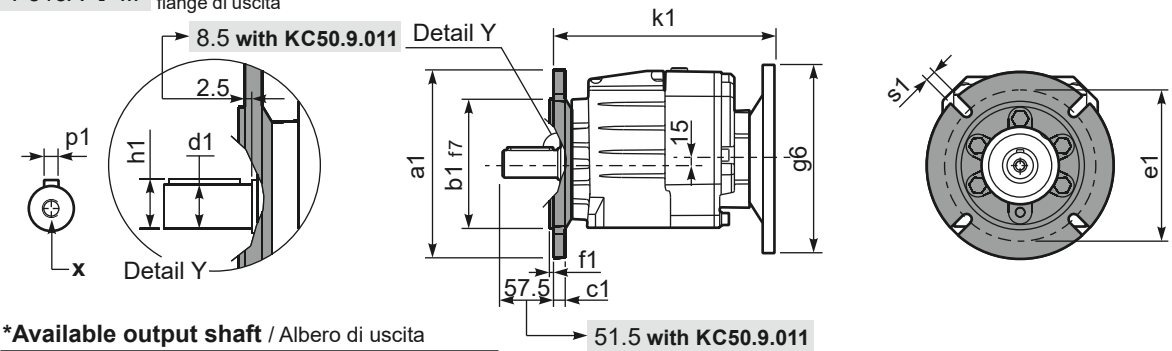


***Available output shaft** / Albero di uscita

| | Shaft - d1 | p1 | h1 | x |
|---|---|---|---|---|
| Standard | ø 30x60 | 8 | 33 | M10x22 |
| On request<br>A richiesta | ø 24x50 | 8 | 27 | M8x19 |
| | ø 25x50 | 8 | 28 | M8x19 |
| | ø 28x60 | 8 | 31 | M8x19 |
| | ø 35x60 | 10 | 38 | M10x22 |

**Available output flanges** / flange di uscita

| a1 ø | b1 | c1 | e1 | f1 | s1 | kit code |
|---|---|---|---|---|---|---|
| 160 | 110 | 14 | 130 | 3.5 | 11 | KC50.9.011 |
| 200 | 130 | 13 | 165 | 3.5 | 11 | KC50.9.012 |
| 250 | 180 | 15.5 | 215 | 4 | 14 | KC50.9.013 |

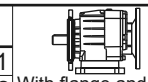

With flange and feet only on request. Ask for compatibility

P513A**-N**... Basic gearbox
Riduttore base

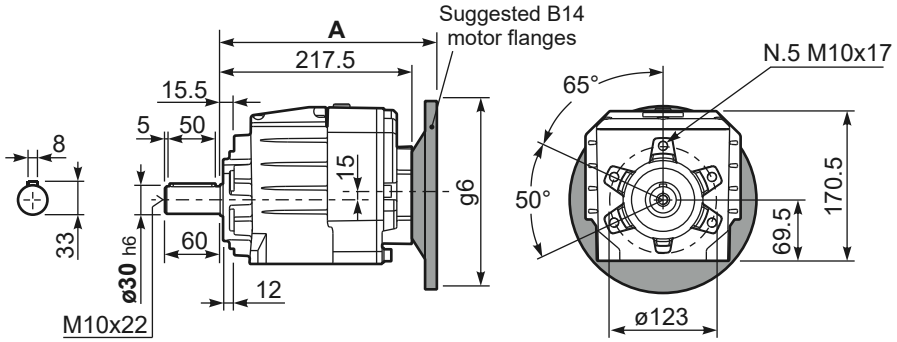


**R**513A**-N**... Input Shaft
Albero in entrata

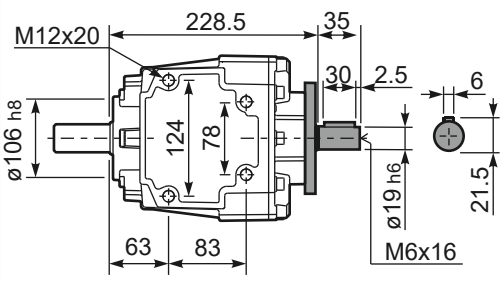


| B5 Motor Flanges | A | $C_{max}$ | g6 | k1 | kit code | k1 with KC50.9.011 |
|---|---|---|---|---|---|---|
| 63 B5 | 238 | 215 | 140 | 240.5 | K063.4.041 | 246.5 |
| 71 B5 | 236 | 225 | 160 | 238.5 | K063.4.042 | 244.5 |
| 80/90 B5 | 238 | 245 | 200 | 240.5 | K063.4.043 | 246.5 |

| B14 Motor Flanges | A | $C_{max}$ | g6 | k1 | kit code | k1 with KC50.9.011 |
|---|---|---|---|---|---|---|
| 71 B14 | 236 | 197.5 | 105 | 238.5 | K063.4.047 | 244.5 |
| 80 B14 | 238 | 205 | 120 | 240.5 | K063.4.046 | 246.5 |
| 90 B14 | 238 | 215 | 140 | 240.5 | K063.4.041 | 246.5 |