Technical Data Sheet
Gearbox
INLINE GEARBOX

MODEL	613A	
Ø OUTPUT SHAFT	35	mm
APPROXIMATE RATIO	224	
EXACT RATIO	224.18	
OUTPUT SPEED	7	RPM
EXACT OUTPUT SPEED	7	RPM
INPUT POWER	0.25	KW
INPUT ROTATION	1400	RPM
INPUT PAM	71B14	
OUTPUT TORQUE	359.34	N.m
NOMINAL TORQUE	520.00	N.m
NOMINAL POWER	0.36	KW
SERVICE FACTOR	1.44	
DYNAMIC EFFICIENCY	0.94	

Oil Quantity (L)

B3/H1	B6/H4	B7/H3	B8/H2	V5/H5	V6/H6
1.05	1.1	1.25	1.25	1.35	1.5

Radial and Axial Loads

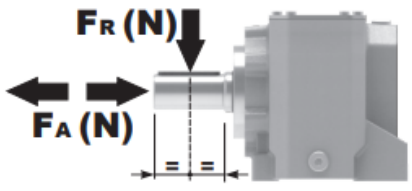

n_2 [min-1]	FA [N]	FR [N]
300	560	2800
200	640	3200
120	760	3800
15	1300	6500

Universal Motors S.A.
Rua Comendador Brandão, 484
4495-375 Póvoa de Varzim
geral@universalmotors.pt
TEL.: 252 299 080

Universal Motors UK, Ltd
Unit E2, Meltham Mills Road
West Yorkshire HD9 4AR
enquiries@universalmotors-group.co.uk
TEL.: +44(0) 1484660222

Universal Motors SL
C/La Habana n.6 nave 4 Pl Camporroso
28806 Alcala de Henares
info@universalmotors-group.es
TEL.: 918 864 213

P613A**B1**... With feet
Con piedini

Gearbox weight peso riduttore	
With flange	**14.3 kg**
With feet	**14.7 Kg**

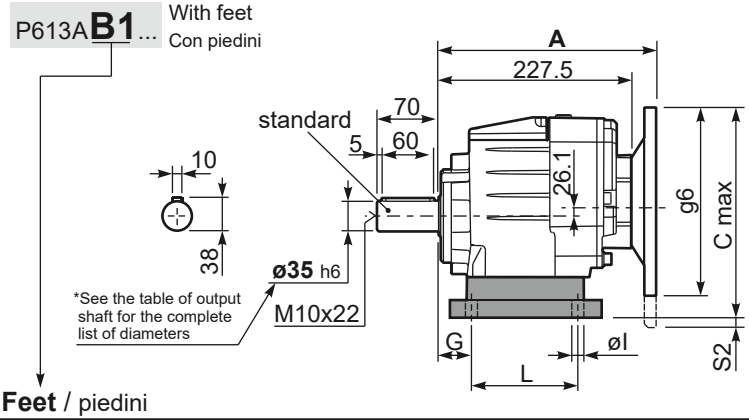

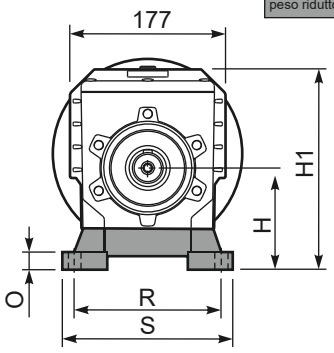

Feet / piedini

Feet Code	Market reference	G	H	R	L	S	H1	O	øl	S2 only with motor flange	B5 max. Flange	kit code
B4	412/3	20	130	180	149.5	216	242	18	14	-	-	KC60.9.024
S4	47-57	30	115	135	165	170	227	25	14	13 132B5	-	KC50.9.022
M3	62/3	35	120	170÷185	110	230	232	20	14	8 132B5	-	KC60.9.023
S7	77	35	140	170	205	204	252	8	14	-	-	KC60.9.029LM
H4	024-243	35	155	170	150	225	267	30	14	-	-	KC60.9.025

Other feet are available, see our web site
Sono disponibili altri piedini, consulta il nostro sito web

A see on page bottom

Most popular types
Tipi più diffusi

P613A**-F**... Output flanges
flange di uscita

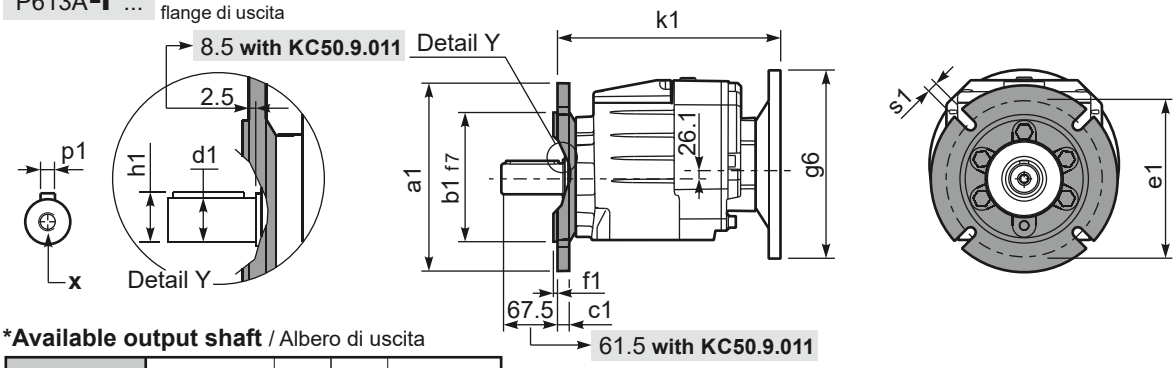

***Available output shaft** / Albero di uscita

	Shaft - d1	p1	h1	x
Standard	ø 35x70	10	38	M10x22
On request A richiesta	ø 28x60	8	31	M8x20
	ø 30x60	8	33	M10x22
	ø 38x70	10	41	M10x25
	ø 40x80	12	43	M12x28

Available output flanges / flange di uscita

a1 ø	b1	c1	e1	f1	s1	kit code
160	110	14	130	3.5	11	KC50.9.011
200	130	13	164	3.5	11	KC50.9.012
250	180	15.5	215	4	14	KC50.9.013

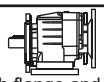

With flange and feet only on request. Ask for compatibility

P613A**-N**... Basic gearbox
Riduttore base

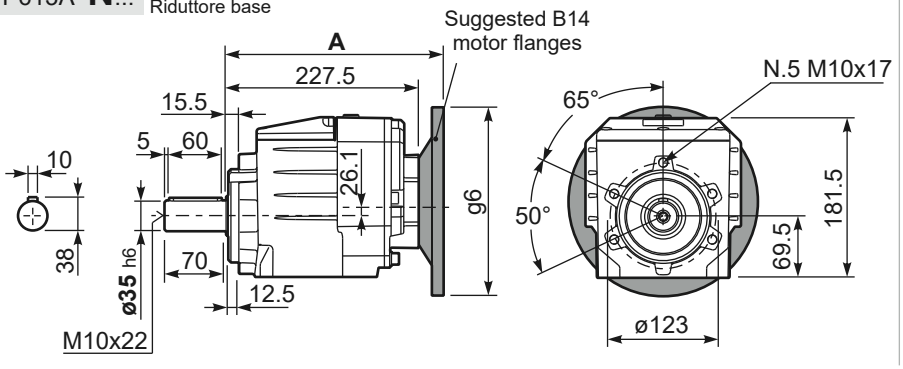

R613A**-N**... Input Shaft
Albero in entrata

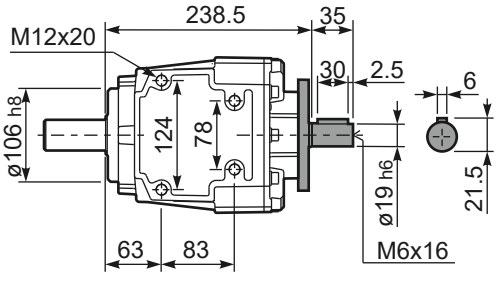

B5 Motor Flanges	A	C_{max}	g6	k1	kit code	k1 with KC50.9.011
63 B5	248	251.1	140	250.5	K063.4.041	256.5
71 B5	246	261.1	160	248.5	K063.4.042	254.5
80/90 B5	248	281.1	200	250.5	K063.4.043	256.5

B14 Motor Flanges	A	C_{max}	g6	k1	kit code	k1 with KC50.9.011
71 B14	246	233.6	105	248.5	K063.4.047	254.5
80 B14	248	241.1	120	250.5	K063.4.046	256.5
90 B14	248	251.1	140	250.5	K063.4.041	256.5