Technical Data Sheet
Gearbox
# INLINE GEARBOX

| | | |
|---|---|---|
| MODEL | 613A | |
| Ø OUTPUT SHAFT | 35 | mm |
| APPROXIMATE RATIO | 205 | |
| EXACT RATIO | 205.43 | |
| OUTPUT SPEED | 7 | RPM |
| EXACT OUTPUT SPEED | 7 | RPM |
| INPUT POWER | 0.12 | KW |
| INPUT ROTATION | 1400 | RPM |
| INPUT PAM | 63B5 | |
| OUTPUT TORQUE | 158.06 | N.m |
| NOMINAL TORQUE | 435.00 | N.m |
| NOMINAL POWER | 0.33 | KW |
| SERVICE FACTOR | 2.75 | |
| DYNAMIC EFFICIENCY | 0.94 | |

## Oil Quantity (L)

| B3/H1 | B6/H4 | B7/H3 | B8/H2 | V5/H5 | V6/H6 |
|---|---|---|---|---|---|
| 1.05 | 1.1 | 1.25 | 1.25 | 1.35 | 1.5 |

## Radial and Axial Loads

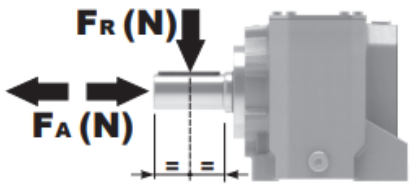


| $n_2$ [min-1] | FA [N] | FR [N] |
|---|---|---|
| 300 | 560 | 2800 |
| 200 | 640 | 3200 |
| 120 | 760 | 3800 |
| 15 | 1300 | 6500 |

Universal Motors S.A.
Rua Comendador Brandão, 484
4495-375 Póvoa de Varzim
geral@universalmotors.pt
TEL.: 252 299 080

Universal Motors UK, Ltd
Unit E2, Meltham Mills Road
West Yorkshire HD9 4AR
enquiries@universalmotors-group.co.uk
TEL.: +44(0) 1484660222

Universal Motors SL
C/La Habana n.6 nave 4 Pl Camporroso
28806 Alcala de Henares
info@universalmotors-group.es
TEL.: 918 864 213

P613A**B1**... With feet
Con piedini

| Gearbox weight peso riduttore | |
|---|---|
| With flange | **14.3 kg** |
| With feet | **14.7 Kg** |

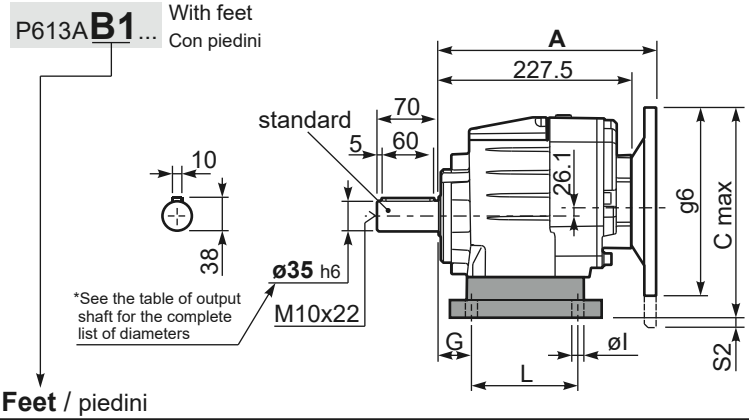


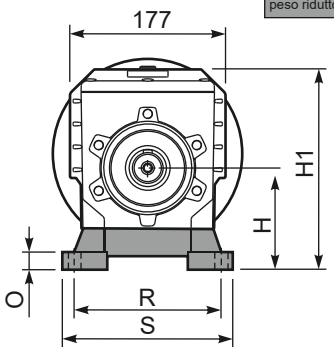


**Feet** / piedini

| Feet Code | Market reference | G | H | R | L | S | H1 | O | øl | S2 only with motor flange | B5 max. Flange | kit code |
|---|---|---|---|---|---|---|---|---|---|---|---|---|
| **B4** | 412/3 | 20 | 130 | 180 | 149.5 | 216 | 242 | 18 | 14 | - | - | KC60.9.024 |
| **S4** | 47-57 | 30 | 115 | 135 | 165 | 170 | 227 | 25 | 14 | 13 132B5 | - | KC50.9.022 |
| **M3** | 62/3 | 35 | 120 | 170÷185 | 110 | 230 | 232 | 20 | 14 | 8 132B5 | - | KC60.9.023 |
| **S7** | 77 | 35 | 140 | 170 | 205 | 204 | 252 | 8 | 14 | - | - | KC60.9.029LM |
| **H4** | 024-243 | 35 | 155 | 170 | 150 | 225 | 267 | 30 | 14 | - | - | KC60.9.025 |

Other feet are available, see our web site
Sono disponibili altri piedini, consulta il nostro sito web

**A see on page bottom**

Most popular types
Tipi più diffusi



P613A**-F**... Output flanges
flange di uscita

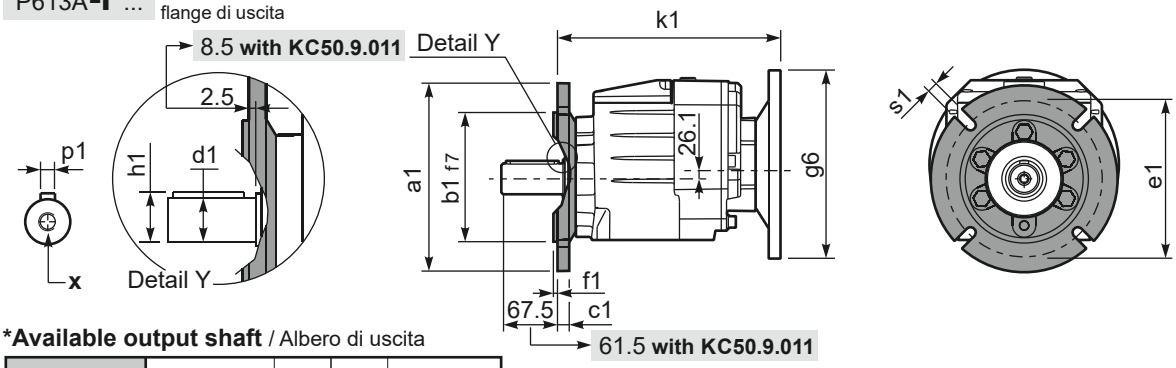


***Available output shaft** / Albero di uscita

| | Shaft - d1 | p1 | h1 | x |
|---|---|---|---|---|
| Standard | ø 35x70 | 10 | 38 | M10x22 |
| On request<br>A richiesta | ø 28x60 | 8 | 31 | M8x20 |
| | ø 30x60 | 8 | 33 | M10x22 |
| | ø 38x70 | 10 | 41 | M10x25 |
| | ø 40x80 | 12 | 43 | M12x28 |

**Available output flanges** / flange di uscita

| a1 ø | b1 | c1 | e1 | f1 | s1 | kit code |
|---|---|---|---|---|---|---|
| 160 | 110 | 14 | 130 | 3.5 | 11 | KC50.9.011 |
| 200 | 130 | 13 | 164 | 3.5 | 11 | KC50.9.012 |
| 250 | 180 | 15.5 | 215 | 4 | 14 | KC50.9.013 |

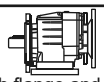

With flange and feet only on request. Ask for compatibility

P613A**-N**... Basic gearbox
Riduttore base

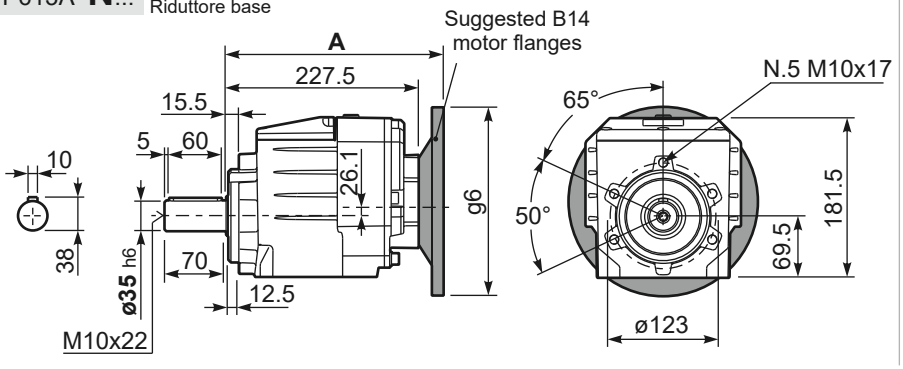


**R**613A**-N**... Input Shaft
Albero in entrata

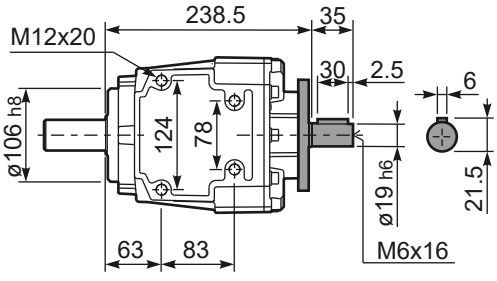


| B5 Motor Flanges | A | $C_{max}$ | g6 | k1 | kit code | k1 with KC50.9.011 |
|---|---|---|---|---|---|---|
| 63 B5 | 248 | 251.1 | 140 | 250.5 | K063.4.041 | 256.5 |
| 71 B5 | 246 | 261.1 | 160 | 248.5 | K063.4.042 | 254.5 |
| 80/90 B5 | 248 | 281.1 | 200 | 250.5 | K063.4.043 | 256.5 |

| B14 Motor Flanges | A | $C_{max}$ | g6 | k1 | kit code | k1 with KC50.9.011 |
|---|---|---|---|---|---|---|
| 71 B14 | 246 | 233.6 | 105 | 248.5 | K063.4.047 | 254.5 |
| 80 B14 | 248 | 241.1 | 120 | 250.5 | K063.4.046 | 256.5 |
| 90 B14 | 248 | 251.1 | 140 | 250.5 | K063.4.041 | 256.5 |