Technical Data Sheet
Gearbox
UMSG

MODEL	UMSG130	
Ø OUTPUT SHAFT	45	mm
APPROXIMATE RATIO	40	
EXACT RATIO	40.00	
OUTPUT SPEED	37	RPM
EXACT OUTPUT SPEED	37	RPM
INPUT POWER	4.00	KW
INPUT ROTATION	1400	RPM
INPUT PAM	112B5	
OUTPUT TORQUE	851.25	N.m
NOMINAL TORQUE	1042.78	N.m
NOMINAL POWER	4.9	KW
SERVICE FACTOR	1.23	
DYNAMIC EFFICIENCY	0.78	

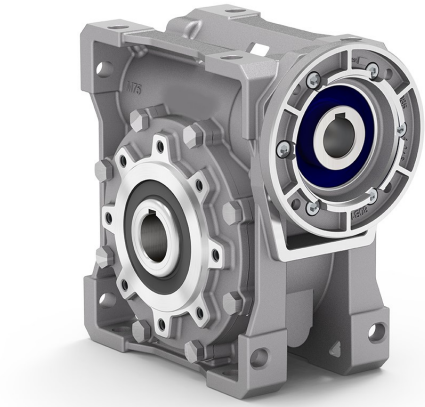

Oil Quantity (L)

B3/H1	B6/H4	B7/H3	B8/H2	V5/H5	V6/H6
4.5	3.5	3.5	3.3	4.5	3.3

Radial and Axial Loads

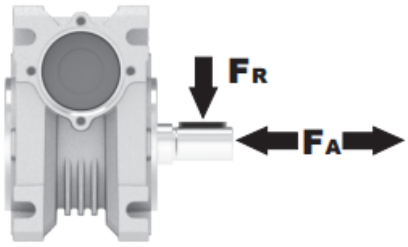

n_2 [min-1]	FA [N]	FR [N]
200	960	4800
100	1240	6200
50	1560	7800
15	2400	12000

Universal Motors S.A.
Rua Comendador Brandão, 484
4495-375 Póvoa de Varzim
geral@universalmotors.pt
TEL.: 252 299 080

Universal Motors UK, Ltd
Unit E2, Meltham Mills Road
West Yorkshire HD9 4AR
enquiries@universalmotors-group.co.uk
TEL.: +44(0) 1484660222

Universal Motors SL
C/La Habana n.6 nave 4 Pl Camporroso
28806 Alcala de Henares
info@universalmotors-group.es
TEL.: 918 864 213

3D dimensions UMSG130

Basic wormbox

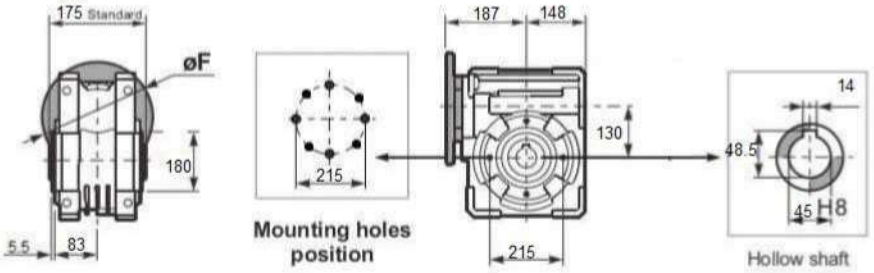

Square flange FA

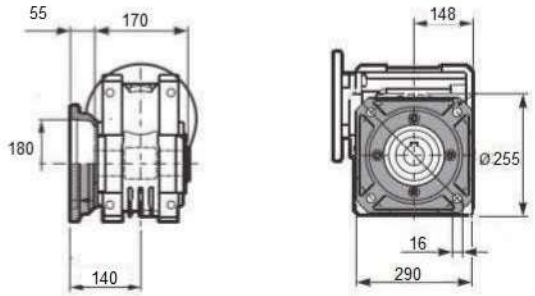

Single Shaft

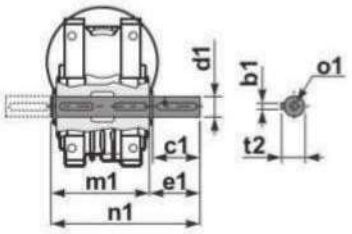

b1	c1	d1	e1	m1	n1	t2	o1
14	80	45	85	170	265	48.5	M16

Feet

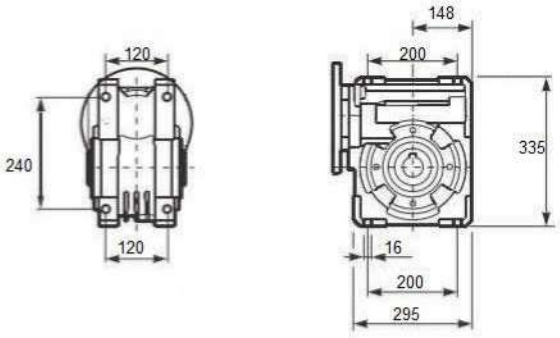

Reaction arm

