Technical Data Sheet
Gearbox
UMSG

| | | |
|---|---|---|
| MODEL | UMSG130 | |
| Ø OUTPUT SHAFT | 45 | mm |
| APPROXIMATE RATIO | 40 | |
| EXACT RATIO | 40.00 | |
| OUTPUT SPEED | 37 | RPM |
| EXACT OUTPUT SPEED | 37 | RPM |
| INPUT POWER | 2.20 | KW |
| INPUT ROTATION | 1400 | RPM |
| INPUT PAM | 100B5 | |
| OUTPUT TORQUE | 468.19 | N.m |
| NOMINAL TORQUE | 1042.78 | N.m |
| NOMINAL POWER | 4.9 | KW |
| SERVICE FACTOR | 2.23 | |
| DYNAMIC EFFICIENCY | 0.78 | |

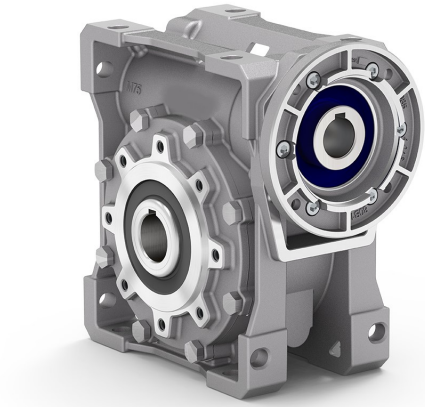

## Oil Quantity (L)

| B3/H1 | B6/H4 | B7/H3 | B8/H2 | V5/H5 | V6/H6 |
|---|---|---|---|---|---|
| 4.5 | 3.5 | 3.5 | 3.3 | 4.5 | 3.3 |

## Radial and Axial Loads

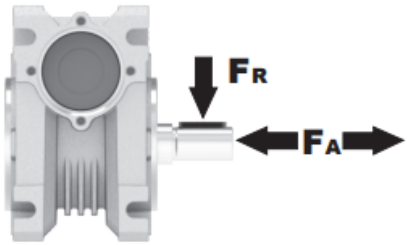


| $n_2$ [min-1] | FA [N] | FR [N] |
|---|---|---|
| 200 | 960 | 4800 |
| 100 | 1240 | 6200 |
| 50 | 1560 | 7800 |
| 15 | 2400 | 12000 |

Universal Motors S.A.
Rua Comendador Brandão, 484
4495-375 Póvoa de Varzim
geral@universalmotors.pt
TEL.: 252 299 080

Universal Motors UK, Ltd
Unit E2, Meltham Mills Road
West Yorkshire HD9 4AR
enquiries@universalmotors-group.co.uk
TEL.: +44(0) 1484660222

Universal Motors SL
C/La Habana n.6 nave 4 Pl Camporroso
28806 Alcala de Henares
info@universalmotors-group.es
TEL.: 918 864 213

# 3D dimensions UMSG130

Basic wormbox

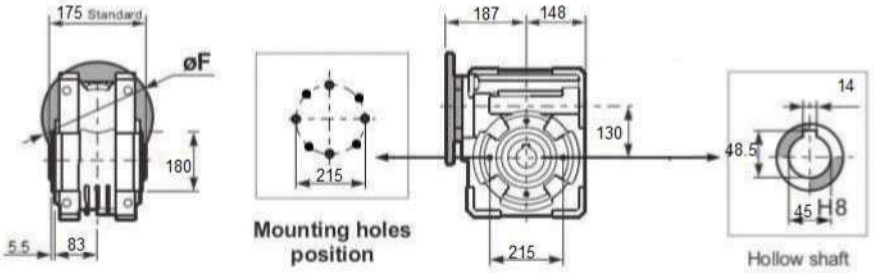


## Square flange FA

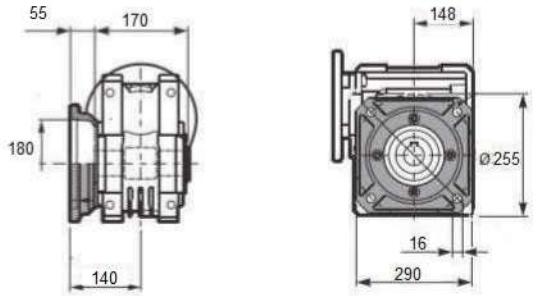


## Single Shaft

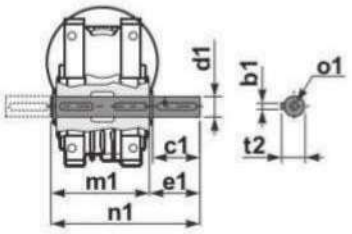


| b1 | c1 | d1 | e1 | m1 | n1 | t2 | o1 |
|---|---|---|---|---|---|---|---|
| 14 | 80 | 45 | 85 | 170 | 265 | 48.5 | M16 |

## Feet

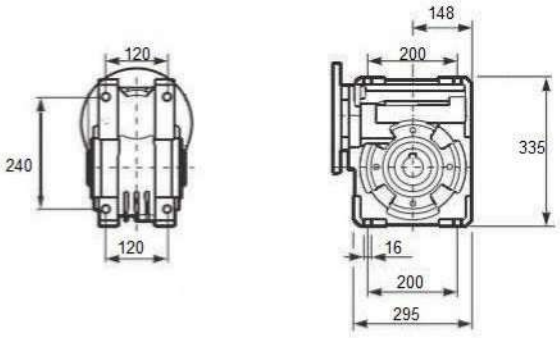


## Reaction arm

