Technical Data Sheet
Gearbox
UMSG

MODEL	UMSG150	
Ø OUTPUT SHAFT	50	mm
APPROXIMATE RATIO	10	
EXACT RATIO	10.00	
OUTPUT SPEED	146	RPM
EXACT OUTPUT SPEED	146	RPM
INPUT POWER	15.00	KW
INPUT ROTATION	1400	RPM
INPUT PAM	160B5	
OUTPUT TORQUE	920.83	N.m
NOMINAL TORQUE	1166.38	N.m
NOMINAL POWER	19	KW
SERVICE FACTOR	1.27	
DYNAMIC EFFICIENCY	0.90	

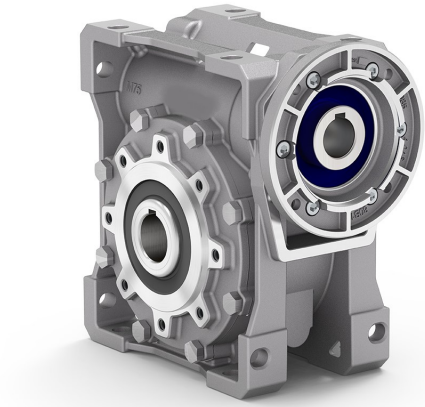

Oil Quantity (L)

B3/H1	B6/H4	B7/H3	B8/H2	V5/H5	V6/H6
7	5.1	5.1	5.4	7	5.1

Radial and Axial Loads

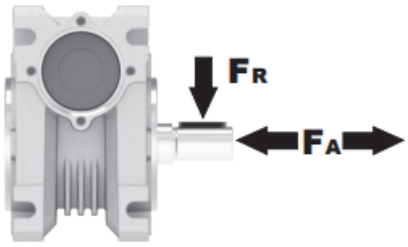

n_2 [min-1]	FA [N]	FR [N]
200	1300	6500
100	1640	8200
50	2120	10600
15	3300	16500

Universal Motors S.A.
Rua Comendador Brandão, 484
4495-375 Póvoa de Varzim
geral@universalmotors.pt
TEL.: 252 299 080

Universal Motors UK, Ltd
Unit E2, Meltham Mills Road
West Yorkshire HD9 4AR
enquiries@universalmotors-group.co.uk
TEL.: +44(0) 1484660222

Universal Motors SL
C/La Habana n.6 nave 4 Pl Camporroso
28806 Alcala de Henares
info@universalmotors-group.es
TEL.: 918 864 213

3D dimensions UMSG150

Basic wormbox

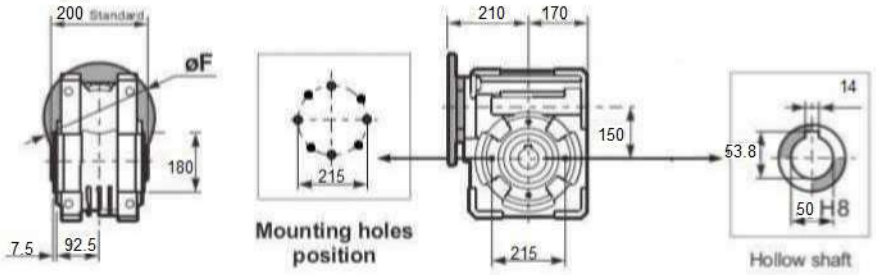

Square flange FA

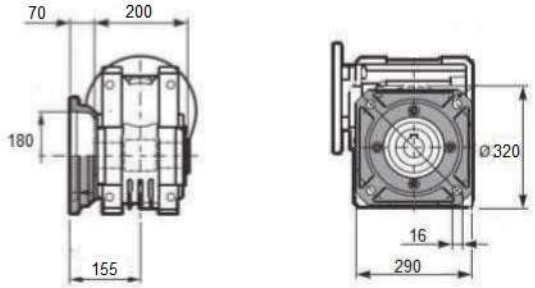

Single Shaft

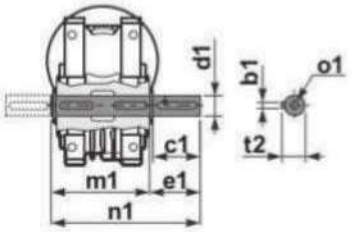

b1	c1	d1	e1	m1	n1	t2	o1
14	82	50	87	200	297	53.5	M16

Feet

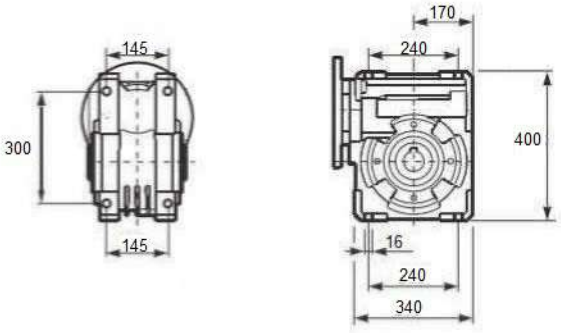

Reaction arm

