Technical Data Sheet
Gearbox
WORM GEARBOX SQUARE DESIGN

MODEL	M30	
Ø OUTPUT SHAFT	14	mm
APPROXIMATE RATIO	7	
EXACT RATIO	7.00	
OUTPUT SPEED	209	RPM
EXACT OUTPUT SPEED	209	RPM
INPUT POWER	0.25	KW
INPUT ROTATION	1400	RPM
INPUT PAM	63B5	
OUTPUT TORQUE	9.55	N.m
NOMINAL TORQUE	17.00	N.m
NOMINAL POWER	0.44	KW
SERVICE FACTOR	1.76	
DYNAMIC EFFICIENCY	0.80	

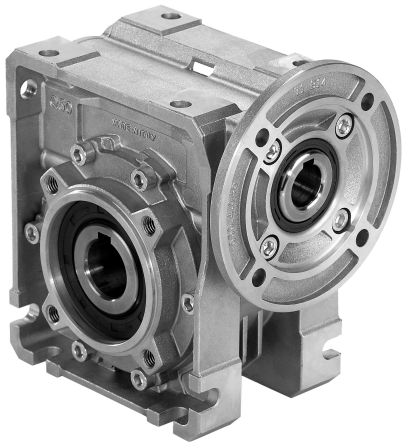

Oil Quantity (L)

B3/H1	B6/H4	B7/H3	B8/H2	V5/H5	V6/H6
0.03	0.03	0.03	0.03	0.03	0.03

Radial and Axial Loads

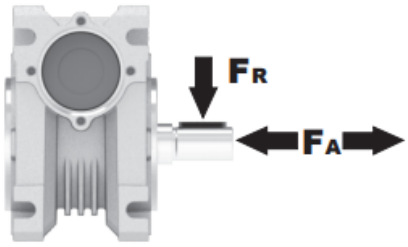

n_2 [min-1]	FA [N]	FR [N]
200	120	600
100	160	800
50	200	1000
15	280	1400

Universal Motors S.A.
Rua Comendador Brandão, 484
4495-375 Póvoa de Varzim
geral@universalmotors.pt
TEL.: 252 299 080

Universal Motors UK, Ltd
Unit E2, Meltham Mills Road
West Yorkshire HD9 4AR
enquiries@universalmotors-group.co.uk
TEL.: +44(0) 1484660222

Universal Motors SL
C/La Habana n.6 nave 4 Pl Camporroso
28806 Alcala de Henares
info@universalmotors-group.es
TEL.: 918 864 213

PM30**FB**... Basic wormbox
Riduttore base

Gearbox weight peso riduttore **1.15 kg**

M. flanges	Kit code	øF	A
56B5	K030.4.041	120	61.5
63B5	K030.4.042	140	62.5
56B14	K030.4.046	80	61.5
63B14	K030.4.045	90	62.5

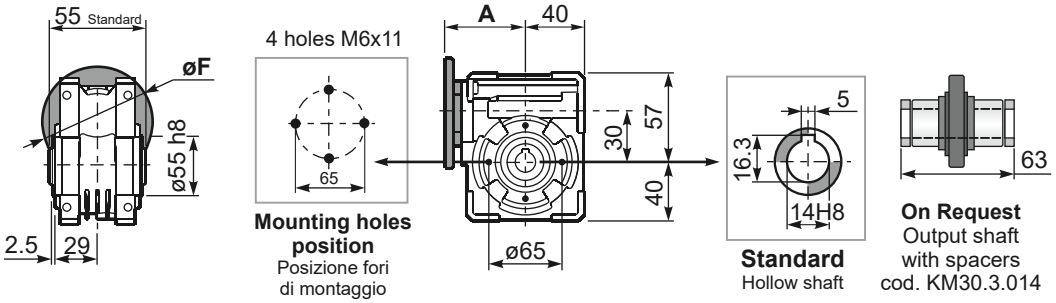

PM30**FC**... Square flange
Flangia quadrata

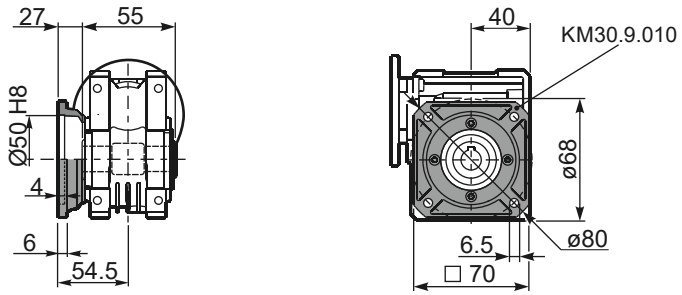

PM30**FB**... Feet
Piedini

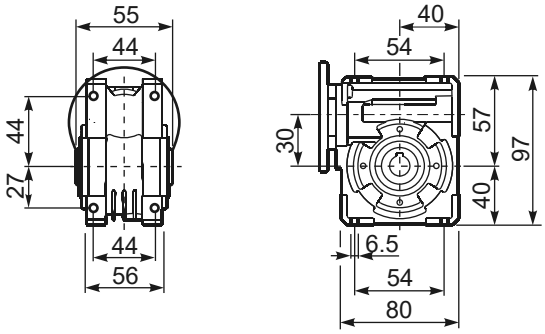

PM30**BR**... Reaction arm
Braccio di reazione

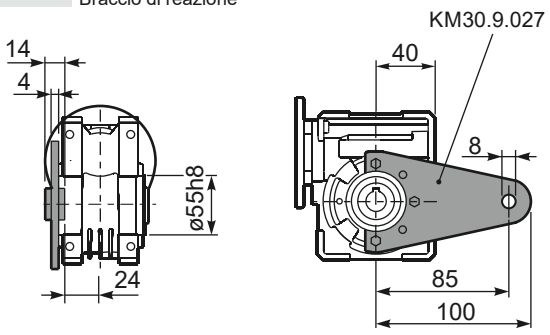

RM30FB... Input shaft
Albero in entrata

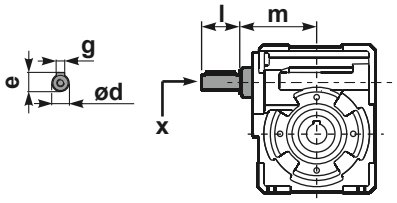

	ød	e	g	l	m	x	kit code
type **B**	9 h6	10.2	3	20	58	-	K030.5.006 PAM63
type **S**	-	-	-	-	-	-	-

PM30.....**S**... Single Shaft
Albero lento semplice

PM30.....**D**... Double Shaft
Albero lento bisp.

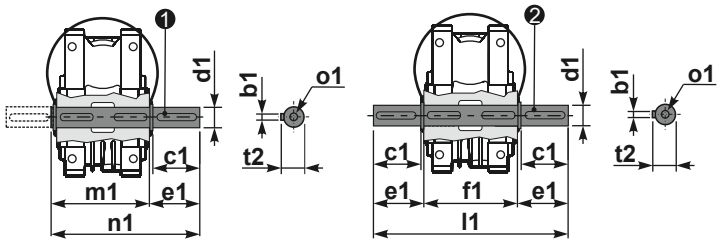

❶ kit cod. K030.5.028 type **B**

❷ kit cod. K030.5.029 type **B**

	b1	c1	d1	e1	f1	l1	m1	n1	t2	o1
type **B**	5	25	$14^{-0.005}_{-0.020}$	35.5	55	126	59	94.5	16	M5x14
type **S**	-	-	-	-	-	-	-	-	-	-