Technical Data Sheet
Gearbox
WORM GEARBOX SQUARE DESIGN

MODEL	M50	
Ø OUTPUT SHAFT	25	mm
APPROXIMATE RATIO	45	
EXACT RATIO	43.00	
OUTPUT SPEED	32	RPM
EXACT OUTPUT SPEED	34	RPM
INPUT POWER	0.18	KW
INPUT ROTATION	1400	RPM
INPUT PAM	63B14	
OUTPUT TORQUE	34.84	N.m
NOMINAL TORQUE	68.00	N.m
NOMINAL POWER	0.35	KW
SERVICE FACTOR	1.94	
DYNAMIC EFFICIENCY	0.66	

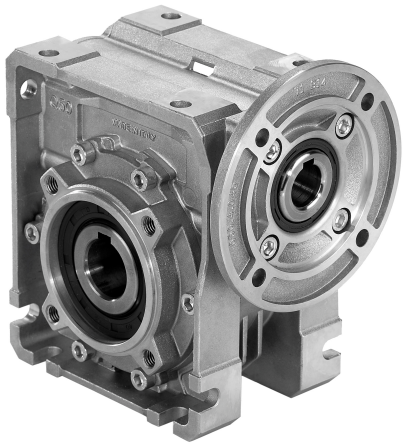

Oil Quantity (L)

B3/H1	B6/H4	B7/H3	B8/H2	V5/H5	V6/H6
0.14	0.14	0.14	0.14	0.14	0.14

Radial and Axial Loads

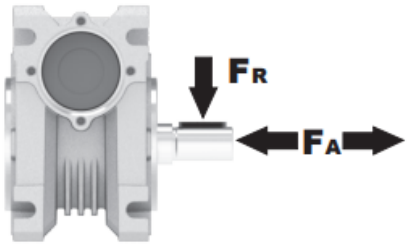

n_2 [min-1]	FA [N]	FR [N]
200	240	1200
100	300	1500
50	380	1900
15	560	2800

Universal Motors S.A.
Rua Comendador Brandão, 484
4495-375 Póvoa de Varzim
geral@universalmotors.pt
TEL.: 252 299 080

Universal Motors UK, Ltd
Unit E2, Meltham Mills Road
West Yorkshire HD9 4AR
enquiries@universalmotors-group.co.uk
TEL.: +44(0) 1484660222

Universal Motors SL
C/La Habana n.6 nave 4 Pl Camporroso
28806 Alcala de Henares
info@universalmotors-group.es
TEL.: 918 864 213

PM50**FB**... Basic wormbox
Riduttore base

M. flanges	Kit code	øF	A
63B5	K050.4.041	138	83.5
71B5	K050.4.042	160	81
80B5	K050.4.043	200	81.5
56B14	KC40.4.049	80	81
63B14	K050.4.047	90	83.5
71B14	K050.4.045	105	81
80B14	K050.4.046	120	81.5

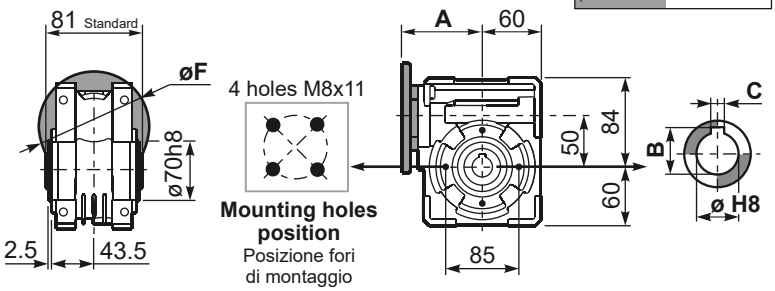

Gearbox weight / peso riduttore: **3.25 kg**

ø H8	B	C	*Spacer code
25 Standard	28.3	8	KM50.3.025
24 on request	27.3	8	KM50.3.024

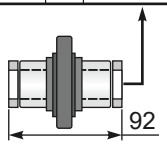

***On Request**
output shaft with spacers

PM50**FC**... Square flange
Flangia quadrata

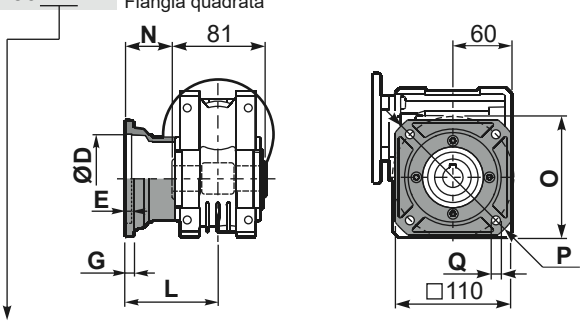

type **B**	øD	E	G	L	N	O	P	Q	kit code
FC	70 H8	5	9	90	49.5	85	125	11	KM50.9.010
FL	70 H8	5	9	120	79.5	85	125	11	KM50.9.011

PM50**F1**... Round flange
Flangia rotonda

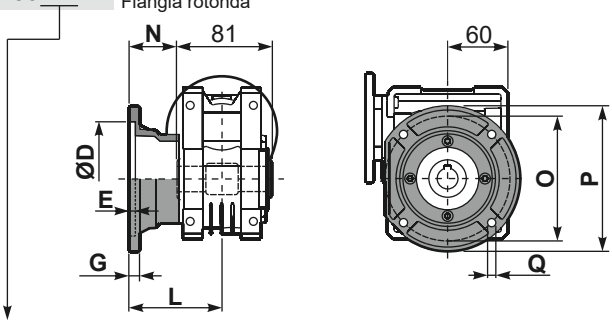

type **S**	øD	E	G	L	N	O	P	Q	kit code
F1	110 H8	5	10	89	48.5	130	160	9.5	KM50.9.012
F2	95 H8	5	14.5	72	31.5	115	140	11	KM50.9.013

PM50**FB**... Feet
Piedini

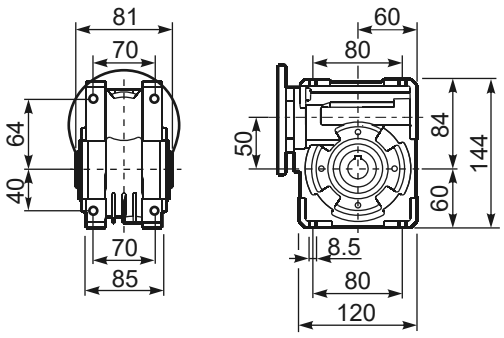

PM50**BR**... Reaction arm
Braccio di reazione

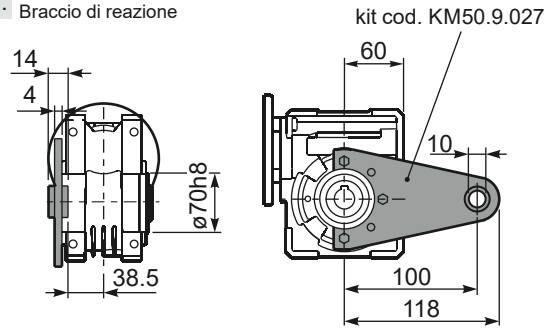

R M50FB... Input shaft
Albero in entrata

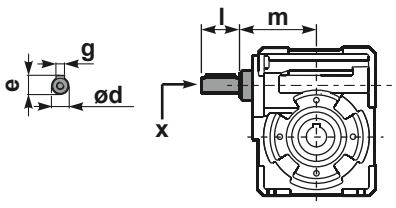

PM50.....**S**... Single Shaft
Albero lento semplice

PM50.....**D**... Double Shaft
Albero lento bisp.

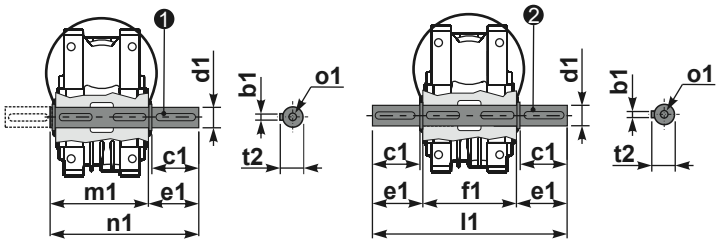

❶ kit cod. K050.5.028 type **B**
kit cod. KS050.5.030 type **S**

❷ kit cod. K050.5.029 type **B**

	ød	e	g	l	m	x	kit code
type **B**	16 h6	18	5	30	79.5	M6x16	❶ K050.5.006 PAM71 ❷ K050.5.007 PAM80
type **S**	14 h6	16	5	30	79.5	M5x10	❶ KS050.5.008 PAM71 ❷ KS050.5.009 PAM80

	b1	c1	d1	e1	f1	l1	m1	n1	t2	o1
type **B**	8	52	$25^{-0.005}_{-0.020}$	59.5	81	200	86.5	146	28	M8x20
type **S**	8	50	$24^{-0.005}_{-0.020}$	68.8	-	-	86.5	155	27	M8x20