Technical Data Sheet
Gearbox
WORM GEARBOX SQUARE DESIGN

MODEL	Q63	
Ø OUTPUT SHAFT	25	mm
APPROXIMATE RATIO	40	
EXACT RATIO	40.00	
OUTPUT SPEED	37	RPM
EXACT OUTPUT SPEED	37	RPM
INPUT POWER	0.55	KW
INPUT ROTATION	1400	RPM
INPUT PAM	80B5	
OUTPUT TORQUE	99.04	N.m
NOMINAL TORQUE	140.00	N.m
NOMINAL POWER	0.78	KW
SERVICE FACTOR	1.42	
DYNAMIC EFFICIENCY	0.66	

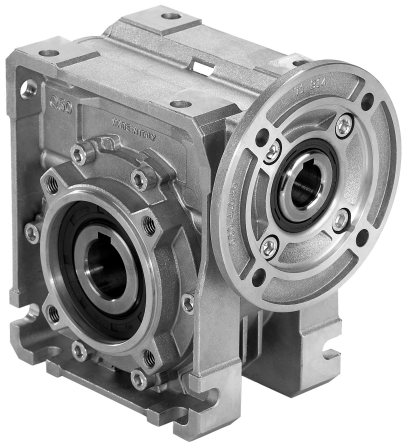

Oil Quantity (L)

B3/H1	B6/H4	B7/H3	B8/H2	V5/H5	V6/H6
0.3	0.3	0.3	0.3	0.3	0.3

Radial and Axial Loads

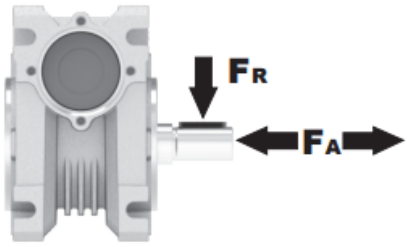

n_2 [min-1]	FA [N]	FR [N]
200	360	1800
100	460	2300
50	600	3000
15	800	4000

Universal Motors S.A.
Rua Comendador Brandão, 484
4495-375 Póvoa de Varzim
geral@universalmotors.pt
TEL.: 252 299 080

Universal Motors UK, Ltd
Unit E2, Meltham Mills Road
West Yorkshire HD9 4AR
enquiries@universalmotors-group.co.uk
TEL.: +44(0) 1484660222

Universal Motors SL
C/La Habana n.6 nave 4 Pl Camporroso
28806 Alcala de Henares
info@universalmotors-group.es
TEL.: 918 864 213

PQ63**FB**... Basic wormbox
Riduttore base

Gearbox weight peso riduttore: **6.00 kg**

M. flanges	Kit code	øF	A
63B5	K063.4.041	140	99.5
71B5	K063.4.042	160	97.5
80/90B5	K063.4.043	200	99.5
71B14	K063.4.047	105	97.5
80B14	K063.4.046	120	99.5
90B14	K063.4.041	140	99.5

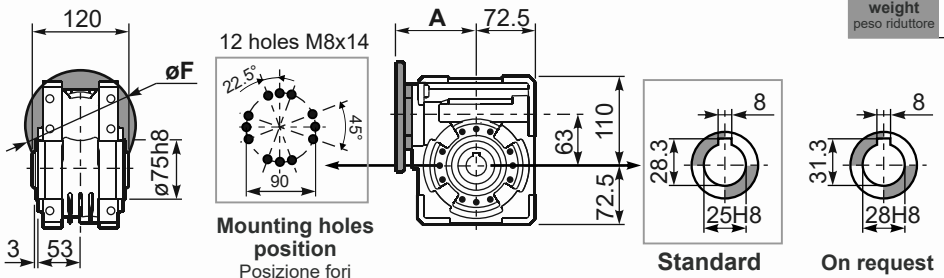

Mounting holes position
Posizione fori di montaggio

Standard
Hollow shaft

On request
A richiesta

PQ63**FC**... Square flange
Flangia quadrata

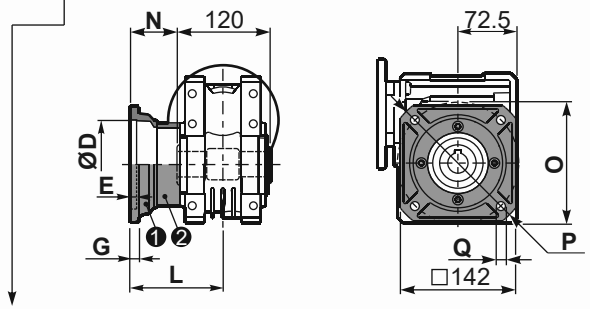

type **B**	øD	E	G	L	N	O	P	Q	kit code
FC	115 $^{+0.20}_{+0.15}$	6	12	86	26	150	180	11	❶ KQ63.9.010 ❷ -
FL	115 $^{+0.20}_{+0.15}$	6	12	116	56	150	180	11	❶ KQ63.9.010 ❷ K063.0.200

PQ63**F1**... Round flange
Flangia rotonda

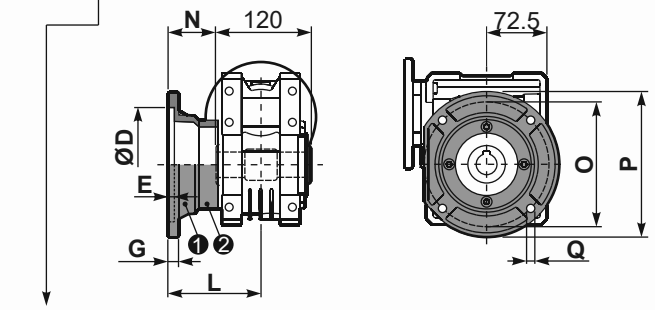

type **S**	øD	E	G	L	N	O	P	Q	kit code
F1	130 $^{+0.20}_{+0.15}$	7	13	110	50	165	200	13	❶ KS070.9.013 ❷ -
F2	115 $^{+0.20}_{+0.15}$	7	13	124	64	150	175	11	❶ KS063.9.013 ❷ -
F3	110 $^{+0.035}_{0}$	5	11	90	30	130	160	10	❶ KS063.9.011 ❷ -

PQ63**FB**... Feet
Piedini

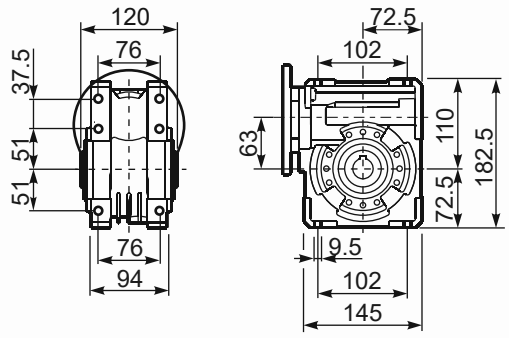

PQ63**BR**... Reaction arm
Braccio di reazione

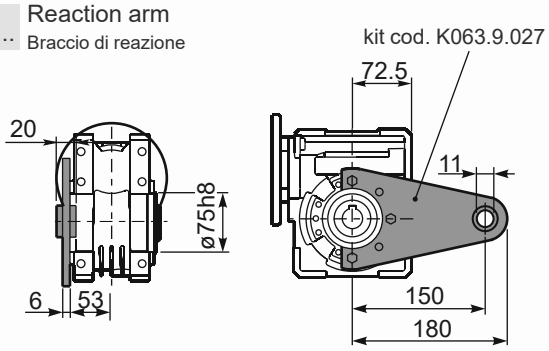

RQ63FB... Input shaft
Albero in entrata

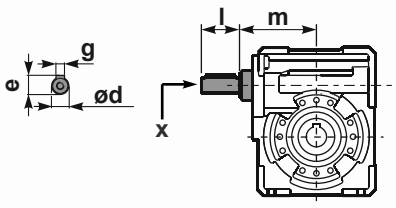

	ød	e	g	l	m	x	kit code
type **B**	18 h6	20.5	6	45	93	M6x16	❶ K063.5.006 PAM80 ❷ K063.5.007 PAM90
type **S**	19 h6	21.5	6	40	93	M8x20	❶ KS063.5.008 PAM80 ❷ KS063.5.009 PAM90

PQ63.....**S**... Single Shaft
Albero lento semplice

PQ63.....**D**... Double Shaft
Albero lento bisp.

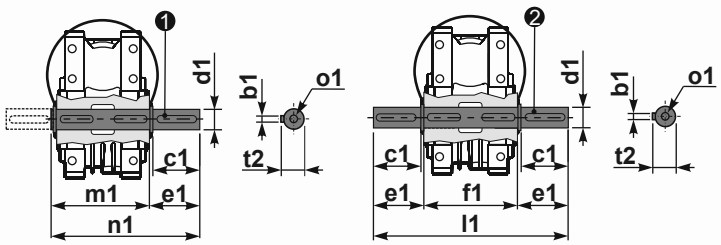

❶ kit cod. K063.5.028 type **B**

❷ kit cod. K063.5.029 type **B**

	b1	c1	d1	e1	f1	l1	m1	n1	t2	o1
type **B**	8	60	25 $^{-0.005}_{-0.020}$	63.2	120	246.4	126.8	190	28	M8x20
type **S**	-	-	-	-	-	-	-	-	-	-