Technical Data Sheet
Gearbox
# WORM GEARBOX SQUARE DESIGN

| | | |
|---|---|---|
| MODEL | Q75 | |
| Ø OUTPUT SHAFT | 30 | mm |
| APPROXIMATE RATIO | 15 | |
| EXACT RATIO | 15.00 | |
| OUTPUT SPEED | 97 | RPM |
| EXACT OUTPUT SPEED | 97 | RPM |
| INPUT POWER | 2.20 | KW |
| INPUT ROTATION | 1400 | RPM |
| INPUT PAM | 100B14 | |
| OUTPUT TORQUE | 191.33 | N.m |
| NOMINAL TORQUE | 250.00 | N.m |
| NOMINAL POWER | 2.9 | KW |
| SERVICE FACTOR | 1.32 | |
| DYNAMIC EFFICIENCY | 0.85 | |

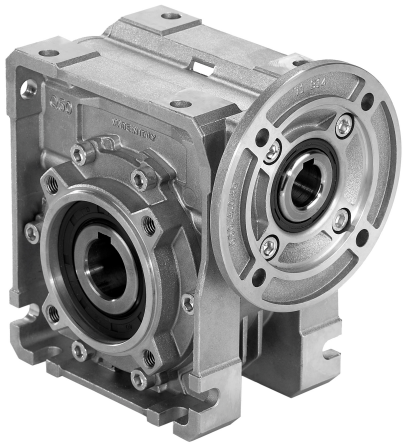

## Oil Quantity (L)

| B3/H1 | B6/H4 | B7/H3 | B8/H2 | V5/H5 | V6/H6 |
|---|---|---|---|---|---|
| 0.4 | 0.4 | 0.4 | 0.4 | 0.4 | 0.4 |

## Radial and Axial Loads

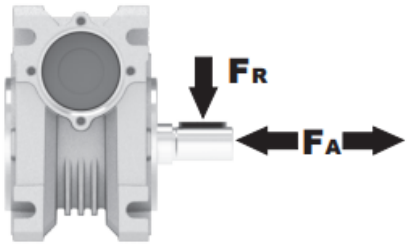


| $n_2$ [min-1] | FA [N] | FR [N] |
|---|---|---|
| 200 | 460 | 2300 |
| 100 | 560 | 2800 |
| 50 | 720 | 3600 |
| 15 | 1000 | 5000 |

Universal Motors S.A.
Rua Comendador Brandão, 484
4495-375 Póvoa de Varzim
geral@universalmotors.pt
TEL.: 252 299 080

Universal Motors UK, Ltd
Unit E2, Meltham Mills Road
West Yorkshire HD9 4AR
enquiries@universalmotors-group.co.uk
TEL.: +44(0) 1484660222

Universal Motors SL
C/La Habana n.6 nave 4 Pl Camporroso
28806 Alcala de Henares
info@universalmotors-group.es
TEL.: 918 864 213

## PQ75**FB**... Basic wormbox
Riduttore base

Gearbox weight / peso riduttore: **8.70 kg**

| M. flanges | Kit code | øF | A |
|---|---|---|---|
| **71B5** | K023.4.041 | 160 | 114 |
| **80/90B5** | K023.4.042 | 200 | 116 |
| **100/112B5** | K023.4.043 | 250 | 125 |
| | | | |
| **80B14** | K085.4.046 | 120 | 116 |
| **90B14** | K085.4.045 | 140 | 116 |
| **100/112B14** | K085.4.047 | 160 | 125 |

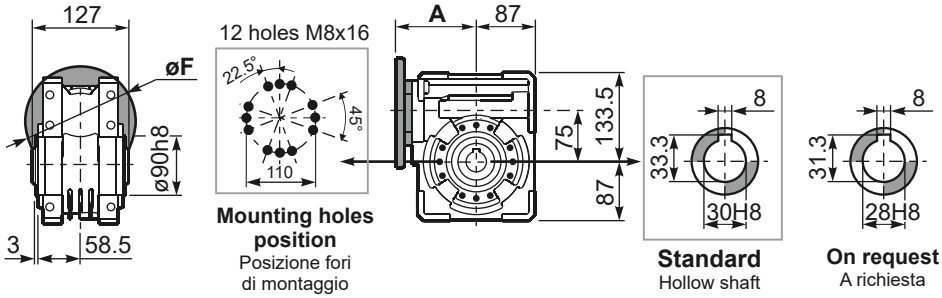


## PQ75**FC**... Square flange
Flangia quadrata

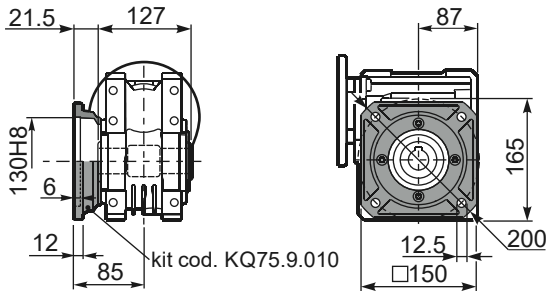


## PQ75**FL**... Square flange
Flangia quadrata

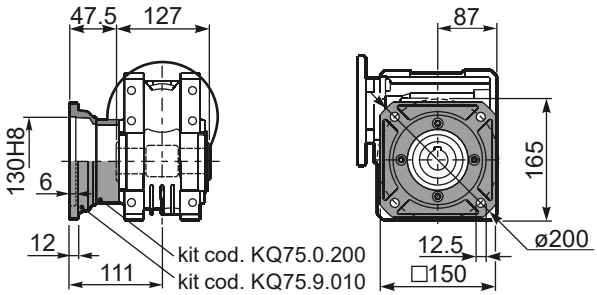


## PQ75**FB**... Feet
Piedini

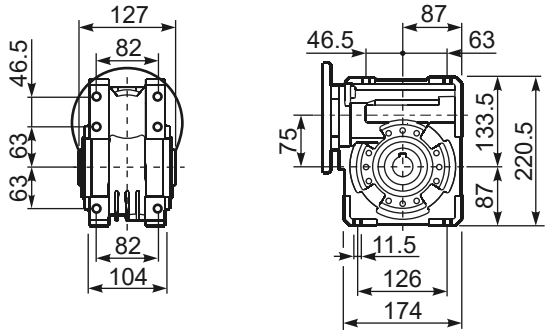


## PQ75**BR**... Reaction arm
Braccio di reazione

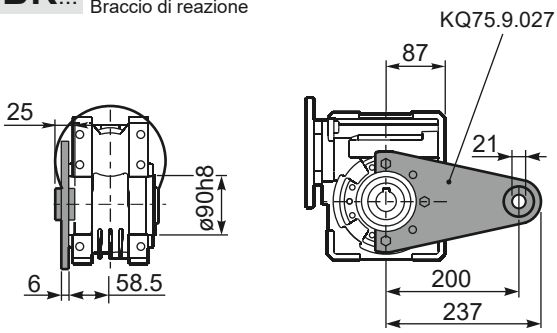


## R**Q75FB**... Input shaft
Albero in entrata

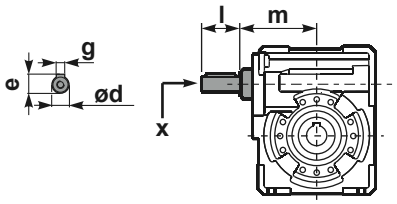


| | ød | e | g | l | m | x | kit code |
|---|---|---|---|---|---|---|---|
| type **B** | 25 h6 | 27.8 | 8 | 50 | 109.5 | M8x20 | KQ75.5.006 PAM80<br>K085.5.007 PAM90<br>K085.5.008 PAM100 |

## PQ75.....**S**... Single Shaft
Albero lento semplice

## PQ75.....**D**... Double Shaft
Albero lento bisp.

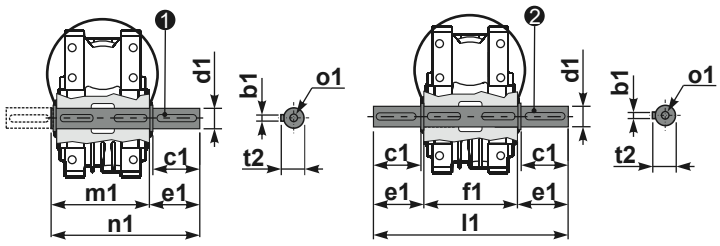


❶ kit cod. KQ75.5.028 Standard
kit cod. KQ75.5.026 On request

❷ kit cod. KQ75.5.029 Standard

| | b1 | c1 | d1 | e1 | f1 | l1 | m1 | n1 | t2 | o1 |
|---|---|---|---|---|---|---|---|---|---|---|
| **Standard** | 8 | 60 | $30^{-0.005}_{-0.020}$ | 65 | 127 | 255 | 134 | 199 | 33 | M8x20 |
| **On request** | 8 | 60 | $28^{-0.005}_{-0.020}$ | 65 | - | - | 134 | 199 | 31 | M8x20 |