Technical Data Sheet
Gearbox
WORM GEARBOX SQUARE DESIGN

MODEL	Q75	
Ø OUTPUT SHAFT	30	mm
APPROXIMATE RATIO	30	
EXACT RATIO	31.00	
OUTPUT SPEED	49	RPM
EXACT OUTPUT SPEED	47	RPM
INPUT POWER	0.75	KW
INPUT ROTATION	1400	RPM
INPUT PAM	80B14	
OUTPUT TORQUE	122.11	N.m
NOMINAL TORQUE	270.00	N.m
NOMINAL POWER	1.7	KW
SERVICE FACTOR	2.27	
DYNAMIC EFFICIENCY	0.77	

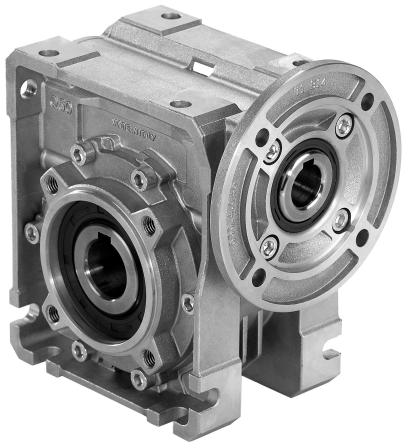

Oil Quantity (L)

B3/H1	B6/H4	B7/H3	B8/H2	V5/H5	V6/H6
0.4	0.4	0.4	0.4	0.4	0.4

Radial and Axial Loads

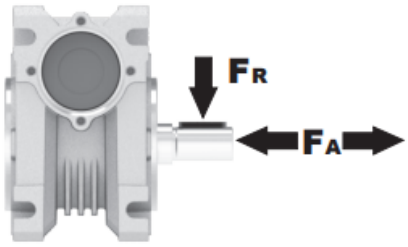

n_2 [min-1]	FA [N]	FR [N]
200	460	2300
100	560	2800
50	720	3600
15	1000	5000

Universal Motors S.A.
Rua Comendador Brandão, 484
4495-375 Póvoa de Varzim
geral@universalmotors.pt
TEL.: 252 299 080

Universal Motors UK, Ltd
Unit E2, Meltham Mills Road
West Yorkshire HD9 4AR
enquiries@universalmotors-group.co.uk
TEL.: +44(0) 1484660222

Universal Motors SL
C/La Habana n.6 nave 4 Pl Camporroso
28806 Alcala de Henares
info@universalmotors-group.es
TEL.: 918 864 213

PQ75**FB**... Basic wormbox
Riduttore base

Gearbox weight / peso riduttore: **8.70 kg**

M. flanges	Kit code	øF	A
71B5	K023.4.041	160	114
80/90B5	K023.4.042	200	116
100/112B5	K023.4.043	250	125
80B14	K085.4.046	120	116
90B14	K085.4.045	140	116
100/112B14	K085.4.047	160	125

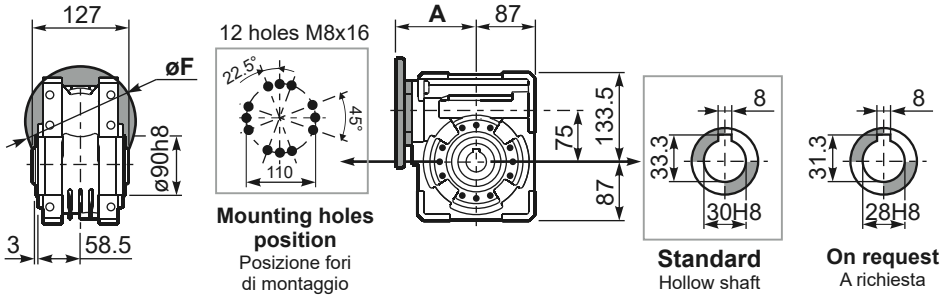

PQ75**FC**... Square flange
Flangia quadrata

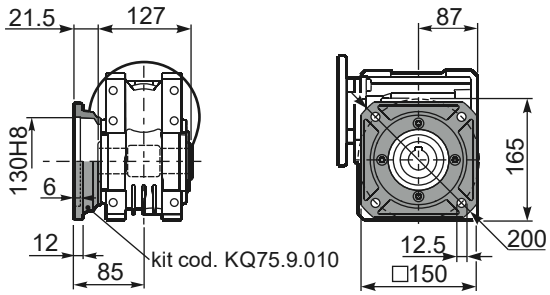

PQ75**FL**... Square flange
Flangia quadrata

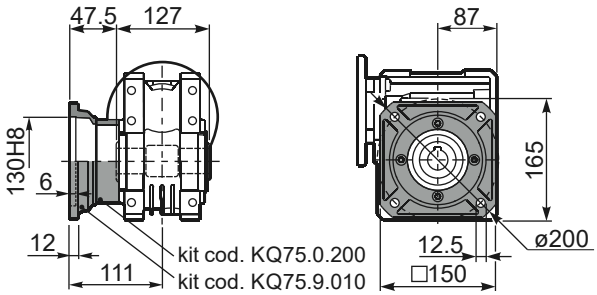

PQ75**FB**... Feet
Piedini

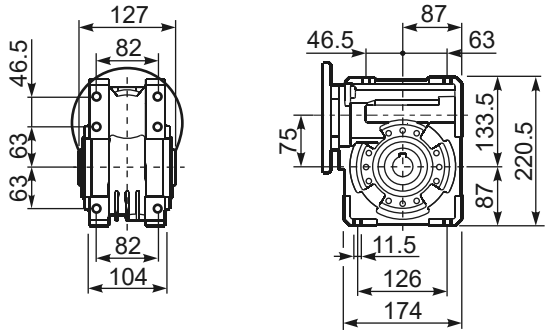

PQ75**BR**... Reaction arm
Braccio di reazione

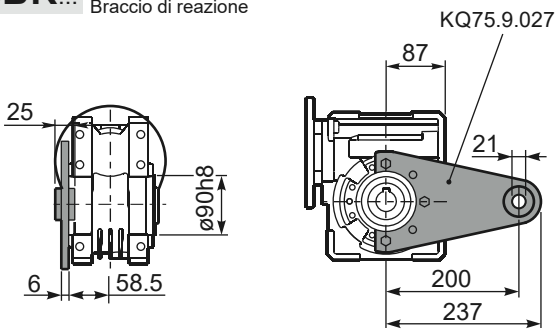

R**Q75FB**... Input shaft
Albero in entrata

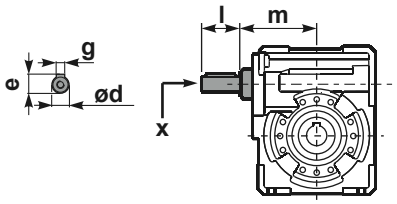

	ød	e	g	l	m	x	kit code
type **B**	25 h6	27.8	8	50	109.5	M8x20	KQ75.5.006 PAM80 K085.5.007 PAM90 K085.5.008 PAM100

PQ75.....**S**... Single Shaft
Albero lento semplice

PQ75.....**D**... Double Shaft
Albero lento bisp.

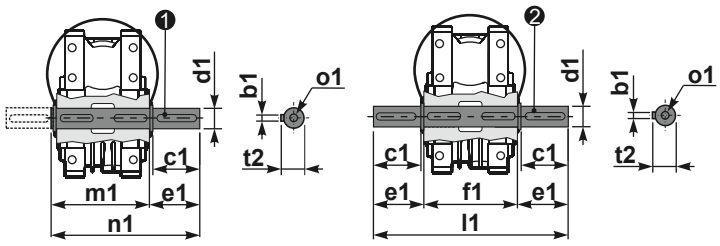

❶ kit cod. KQ75.5.028 Standard
kit cod. KQ75.5.026 On request

❷ kit cod. KQ75.5.029 Standard

	b1	c1	d1	e1	f1	l1	m1	n1	t2	o1
Standard	8	60	$30^{-0.005}_{-0.020}$	65	127	255	134	199	33	M8x20
On request	8	60	$28^{-0.005}_{-0.020}$	65	-	-	134	199	31	M8x20