Technical Data Sheet
Gearbox
WORM GEARBOX SQUARE DESIGN

MODEL	Q85	
Ø OUTPUT SHAFT	35	mm
APPROXIMATE RATIO	30	
EXACT RATIO	28.00	
OUTPUT SPEED	49	RPM
EXACT OUTPUT SPEED	52	RPM
INPUT POWER	3.00	KW
INPUT ROTATION	1400	RPM
INPUT PAM	100B14	
OUTPUT TORQUE	429.72	N.m
NOMINAL TORQUE	347.00	N.m
NOMINAL POWER	2.4	KW
SERVICE FACTOR	0.80	
DYNAMIC EFFICIENCY	0.75	

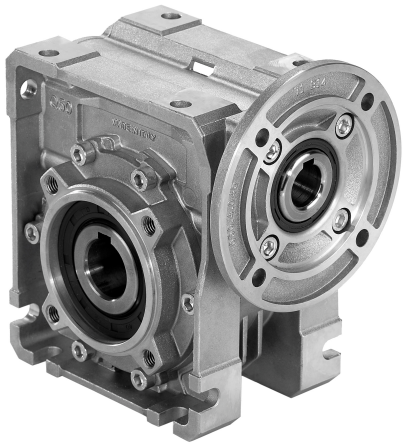

Oil Quantity (L)

B3/H1	B6/H4	B7/H3	B8/H2	V5/H5	V6/H6
1.2	1.2	1.2	1.2	1.2	1.2

Radial and Axial Loads

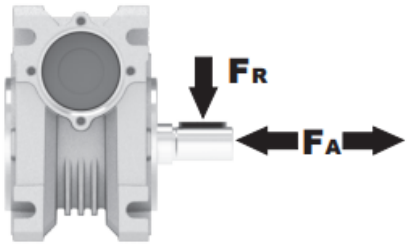

n_2 [min-1]	FA [N]	FR [N]
200	500	2500
100	600	3000
50	800	4000
15	1160	5800

Universal Motors S.A.
Rua Comendador Brandão, 484
4495-375 Póvoa de Varzim
geral@universalmotors.pt
TEL.: 252 299 080

Universal Motors UK, Ltd
Unit E2, Meltham Mills Road
West Yorkshire HD9 4AR
enquiries@universalmotors-group.co.uk
TEL.: +44(0) 1484660222

Universal Motors SL
C/La Habana n.6 nave 4 Pl Camporroso
28806 Alcala de Henares
info@universalmotors-group.es
TEL.: 918 864 213

PQ85FB... Basic wormbox
Riduttore base

M. flanges	Kit code	øF	A
71B5	K023.4.041	160	116.5
80/90B5	K023.4.042	200	118.5
100/112B5	K023.4.043	250	127.5
80B14	K085.4.046	120	118.5
90B14	K085.4.045	140	118.5
100/112B14	K085.4.047	160	127.5

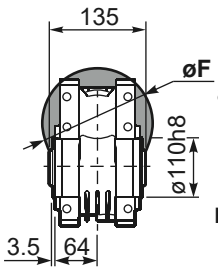

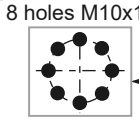

Mounting holes position
Posizione fori di montaggio

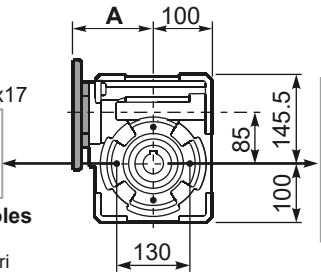

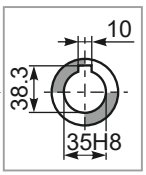

Standard
Hollow shaft

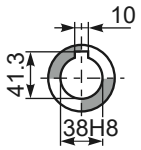

On request
A richiesta

Gearbox weight peso riduttore: **12.1 kg**

PQ85FC... Output flange
Flangia uscita

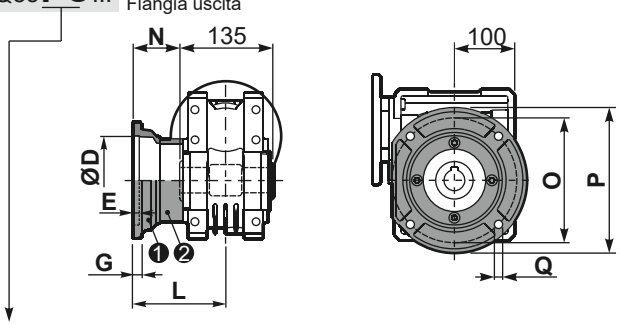

type **B**	øD	E	G	L	N	O	P	Q	kit code
FC	152 +0.06 +0.00	5	16	108	40.5	176	205	13	❶ K085.9.010 ❷ -
FL	152 +0.06 +0.00	5	16	148.5	81	176	205	13	❶ K085.9.010 ❷ K085.0.201

PQ85F1... Output flange
Flangia uscita

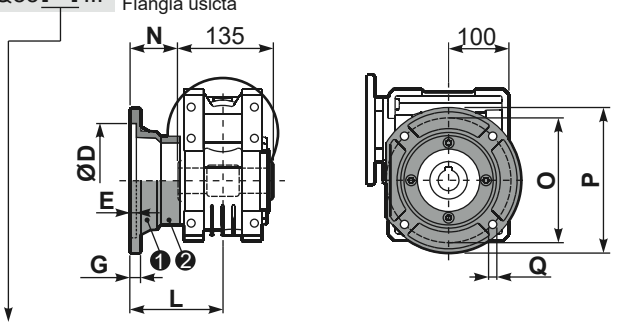

type **S**	øD	E	G	L	N	O	P	Q	kit code
F1	130 H7	5	13	117.5	50	165	200	11.5	❶ KS085.9.012 ❷ -
F2	152 +0.06 +0.00	5	15	147.5	80	180	205	12.5	❶ KS085.9.013 ❷ -
F4	130 H7	5	13	106.5	39	165	200	13	❶ KS085.9.015 ❷ -

PQ85FB... Feet
Piedini

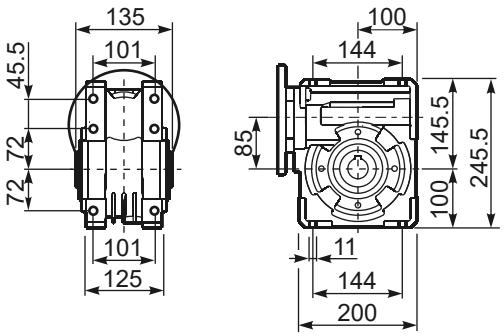

PQ85BR... Reaction arm
Braccio di reazione

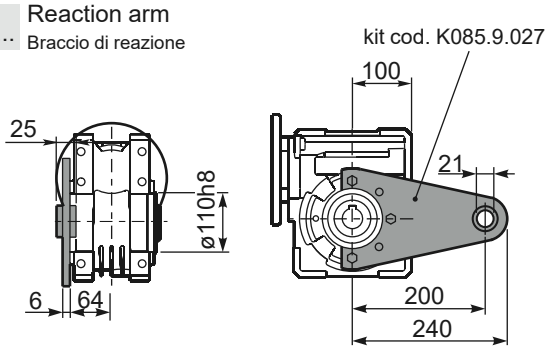

RQ85FB... Input shaft
Albero in entrata

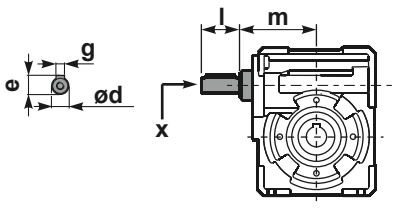

	ød	e	g	l	m	x	kit code
type **B**	25 h6	28	8	50	112	M8x20	❶ K085.5.007 PAM90 ❷ K085.5.008 PAM100
type **S**	24 h6	27	8	50	112	M8x20	❶ KS085.5.009 PAM90 ❷ KS085.5.011 PAM100

PQ85.....S... Single Shaft
Albero lento semplice

PQ85.....D... Double Shaft
Albero lento bisp.

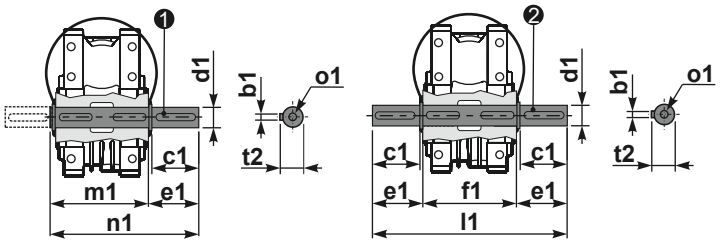

❶ kit cod. K085.5.028 type **B**

❷ kit cod. K085.5.029 type **B**

	b1	c1	d1	e1	f1	l1	m1	n1	t2	o1
type **B**	10	60	35 -0.005 -0.020	73.5	135	282	141	214.5	38	M10x23
type **S**	-	-	-	-	-	-	-	-	-	-