Technical Data Sheet
Gearbox
WORM GEARBOX SQUARE DESIGN

| | | |
|---|---|---|
| MODEL | Q85 | |
| Ø OUTPUT SHAFT | 35 | mm |
| APPROXIMATE RATIO | 65 | |
| EXACT RATIO | 67.00 | |
| OUTPUT SPEED | 22 | RPM |
| EXACT OUTPUT SPEED | 22 | RPM |
| INPUT POWER | 0.75 | KW |
| INPUT ROTATION | 1400 | RPM |
| INPUT PAM | 80B14 | |
| OUTPUT TORQUE | 222.79 | N.m |
| NOMINAL TORQUE | 289.00 | N.m |
| NOMINAL POWER | 0.97 | KW |
| SERVICE FACTOR | 1.29 | |
| DYNAMIC EFFICIENCY | 0.65 | |

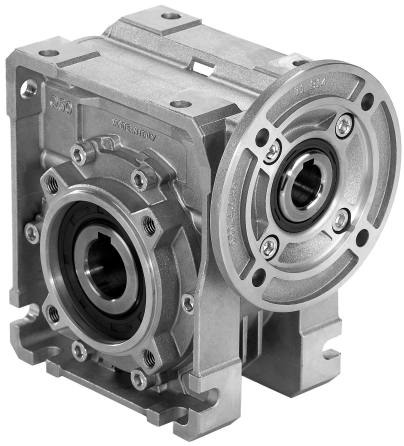

## Oil Quantity (L)

| B3/H1 | B6/H4 | B7/H3 | B8/H2 | V5/H5 | V6/H6 |
|---|---|---|---|---|---|
| 1.2 | 1.2 | 1.2 | 1.2 | 1.2 | 1.2 |

## Radial and Axial Loads

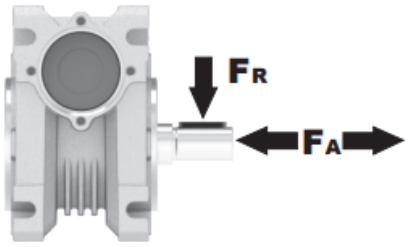


| $n_2$ [min-1] | FA [N] | FR [N] |
|---|---|---|
| 200 | 500 | 2500 |
| 100 | 600 | 3000 |
| 50 | 800 | 4000 |
| 15 | 1160 | 5800 |

Universal Motors S.A.
Rua Comendador Brandão, 484
4495-375 Póvoa de Varzim
geral@universalmotors.pt
TEL.: 252 299 080

Universal Motors UK, Ltd
Unit E2, Meltham Mills Road
West Yorkshire HD9 4AR
enquiries@universalmotors-group.co.uk
TEL.: +44(0) 1484660222

Universal Motors SL
C/La Habana n.6 nave 4 Pl Camporroso
28806 Alcala de Henares
info@universalmotors-group.es
TEL.: 918 864 213

## PQ85FB... Basic wormbox
Riduttore base

| M. flanges | Kit code | øF | A |
|---|---|---|---|
| **71B5** | K023.4.041 | 160 | 116.5 |
| **80/90B5** | K023.4.042 | 200 | 118.5 |
| **100/112B5** | K023.4.043 | 250 | 127.5 |
| | | | |
| **80B14** | K085.4.046 | 120 | 118.5 |
| **90B14** | K085.4.045 | 140 | 118.5 |
| **100/112B14** | K085.4.047 | 160 | 127.5 |

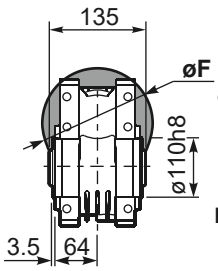


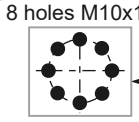


**Mounting holes position**
Posizione fori di montaggio

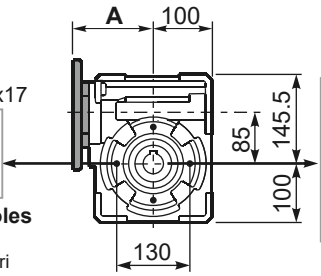


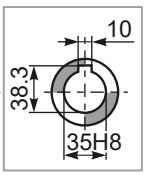


**Standard**
Hollow shaft

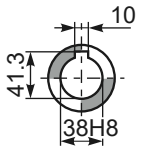


**On request**
A richiesta

**Gearbox weight** peso riduttore: **12.1 kg**

## PQ85FC... Output flange
Flangia uscita

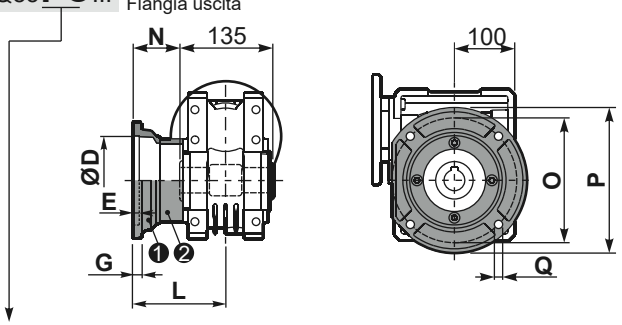


| type **B** | øD | E | G | L | N | O | P | Q | kit code |
|---|---|---|---|---|---|---|---|---|---|
| **FC** | 152 +0.06 +0.00 | 5 | 16 | 108 | 40.5 | 176 | 205 | 13 | ❶ K085.9.010<br>❷ - |
| **FL** | 152 +0.06 +0.00 | 5 | 16 | 148.5 | 81 | 176 | 205 | 13 | ❶ K085.9.010<br>❷ K085.0.201 |

## PQ85F1... Output flange
Flangia uscita

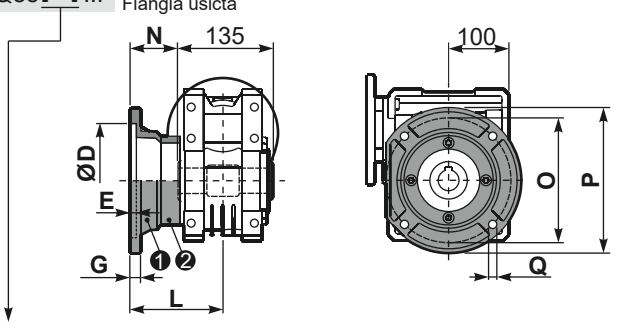


| type **S** | øD | E | G | L | N | O | P | Q | kit code |
|---|---|---|---|---|---|---|---|---|---|
| **F1** | 130 H7 | 5 | 13 | 117.5 | 50 | 165 | 200 | 11.5 | ❶ KS085.9.012<br>❷ - |
| **F2** | 152 +0.06 +0.00 | 5 | 15 | 147.5 | 80 | 180 | 205 | 12.5 | ❶ KS085.9.013<br>❷ - |
| **F4** | 130 H7 | 5 | 13 | 106.5 | 39 | 165 | 200 | 13 | ❶ KS085.9.015<br>❷ - |

## PQ85FB... Feet
Piedini

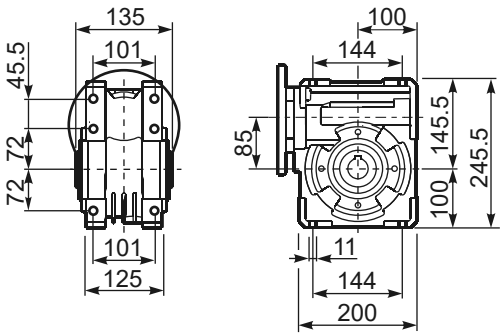


## PQ85BR... Reaction arm
Braccio di reazione

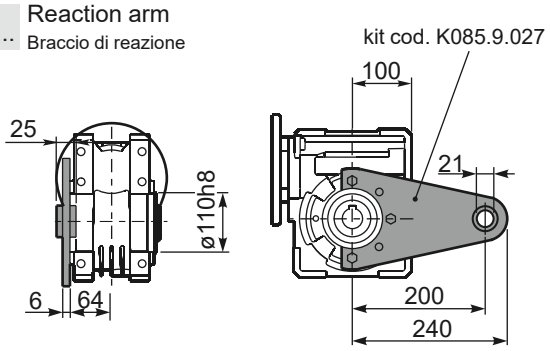


## RQ85FB... Input shaft
Albero in entrata

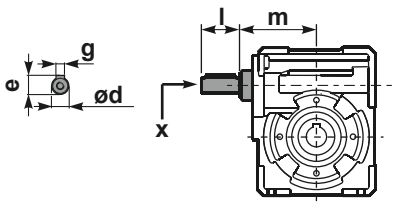


| | ød | e | g | l | m | x | kit code |
|---|---|---|---|---|---|---|---|
| type **B** | 25 h6 | 28 | 8 | 50 | 112 | M8x20 | ❶ K085.5.007 PAM90<br>❷ K085.5.008 PAM100 |
| type **S** | 24 h6 | 27 | 8 | 50 | 112 | M8x20 | ❶ KS085.5.009 PAM90<br>❷ KS085.5.011 PAM100 |

## PQ85.....S... Single Shaft
Albero lento semplice

## PQ85.....D... Double Shaft
Albero lento bisp.

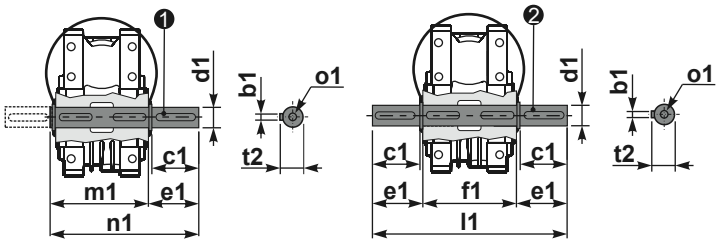


❶ kit cod. K085.5.028 type **B**

❷ kit cod. K085.5.029 type **B**

| | b1 | c1 | d1 | e1 | f1 | l1 | m1 | n1 | t2 | o1 |
|---|---|---|---|---|---|---|---|---|---|---|
| type **B** | 10 | 60 | 35 -0.005 -0.020 | 73.5 | 135 | 282 | 141 | 214.5 | 38 | M10x23 |
| type **S** | - | - | - | - | - | - | - | - | - | - |