Technical Data Sheet
Gearbox
WORM GEARBOX SQUARE DESIGN

MODEL	Q11	
Ø OUTPUT SHAFT	42	mm
APPROXIMATE RATIO	45	
EXACT RATIO	45.00	
OUTPUT SPEED	32	RPM
EXACT OUTPUT SPEED	32	RPM
INPUT POWER	2.20	KW
INPUT ROTATION	1400	RPM
INPUT PAM	100B5	
OUTPUT TORQUE	492.95	N.m
NOMINAL TORQUE	599.00	N.m
NOMINAL POWER	2.7	KW
SERVICE FACTOR	1.23	
DYNAMIC EFFICIENCY	0.73	

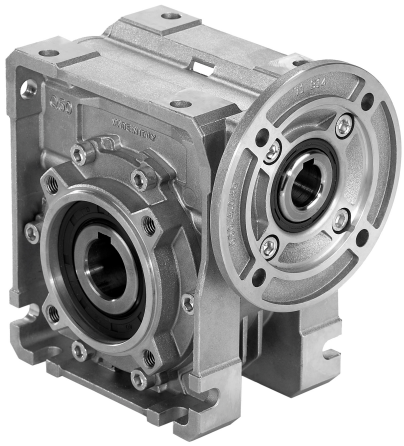

Oil Quantity (L)

B3/H1	B6/H4	B7/H3	B8/H2	V5/H5	V6/H6
1.9	1.35	1.35	2	2	2

Radial and Axial Loads

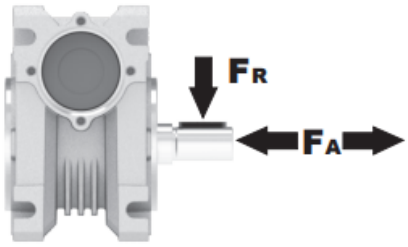

n_2 [min-1]	FA [N]	FR [N]
200	600	2900
100	750	3600
50	920	4600
15	1400	7000

Universal Motors S.A.
Rua Comendador Brandão, 484
4495-375 Póvoa de Varzim
geral@universalmotors.pt
TEL.: 252 299 080

Universal Motors UK, Ltd
Unit E2, Meltham Mills Road
West Yorkshire HD9 4AR
enquiries@universalmotors-group.co.uk
TEL.: +44(0) 1484660222

Universal Motors SL
C/La Habana n.6 nave 4 Pl Camporroso
28806 Alcala de Henares
info@universalmotors-group.es
TEL.: 918 864 213

PQ11**FB**... Basic wormbox
Riduttore base

M. flanges	Kit code	øF	A
71B5	K023.4.041	160	136
80/90B5	K023.4.042	200	138
100/112B5	K023.4.043	250	147
132B5	-	300	187
80B14	K085.4.046	120	138
90B14	K085.4.045	140	138
100/112B14	K023.4.041	160	136
132B14	-	200	187

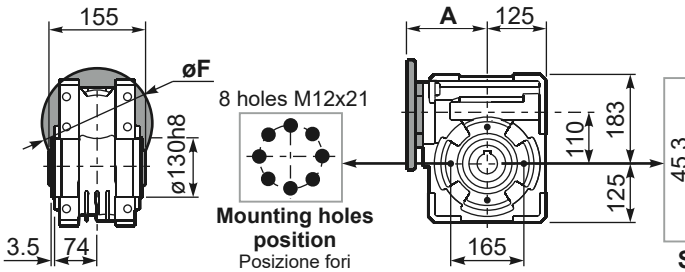

Gearbox weight peso riduttore: **35.0 kg**

PQ11**FC**... Output flange
Flangia uscita

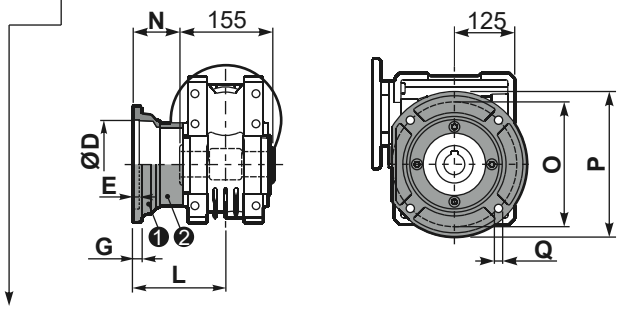

type **B**	øD	E	G	L	N	O	P	Q	kit code
FC	170 +0.083 +0.043	11	16.5	131.5	54	230	270	13	❶ K110.9.010 ❷ -
FL	170 +0.083 +0.043	11	16.5	179.5	102	230	270	13	❶ K110.9.011 ❷ -

PQ11**F1**... Output flange
Flangia uscita

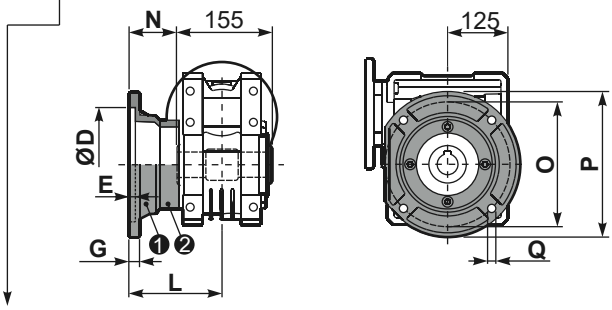

type **S**	øD	E	G	L	N	O	P	Q	kit code
F1	180 +0.040 0	5	18	150	72.5	215	250	15	❶ KS110.9.014 ❷ -
F3	180 +0.040 0	5	18	130	52.5	215	250	15	❶ KS110.9.013 ❷ -

PQ11**FB**... Feet
Piedini

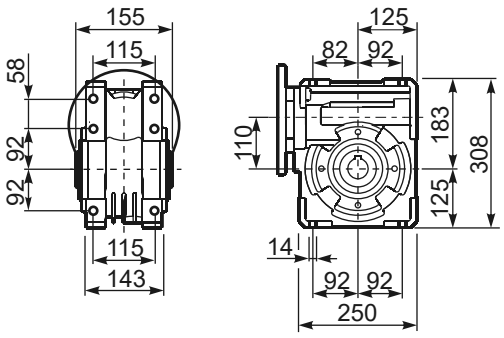

PQ11**BR**... Reaction arm
Braccio di reazione

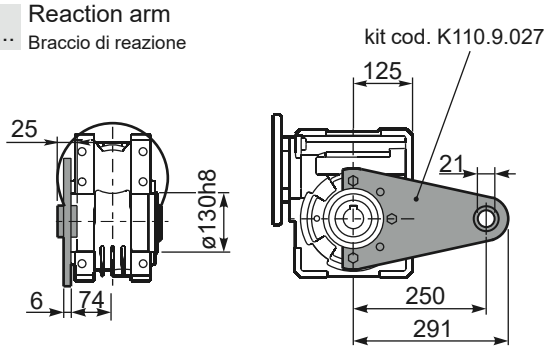

RQ11FB... Input shaft
Albero in entrata

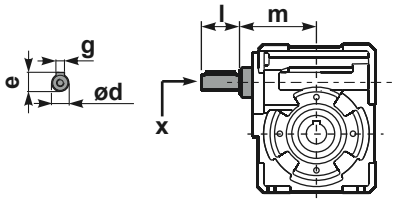

PQ11.....**S**... Single Shaft
Albero lento semplice

PQ11.....**D**... Double Shaft
Albero lento bisp.

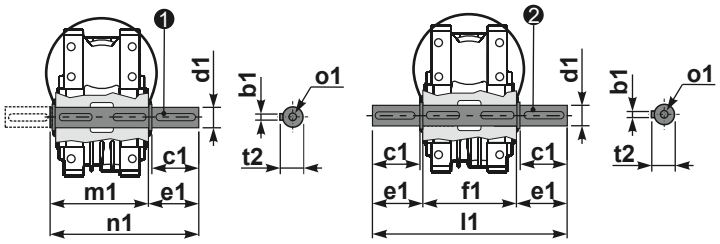

❶ kit cod. K110.5.028 type **B**

❷ kit cod. K110.5.029 type **B**

	ød	e	g	l	m	x	kit code
type **B**	25 h6	28	8	50	131.5	M8x20	❶ K085.5.007 PAM90 ❷ K085.5.008 PAM100
type **S**	24 h6	27	8	50	131.5	M8x20	❶ KS085.5.009 PAM90 ❷ KS085.5.011 PAM100

	b1	c1	d1	e1	f1	l1	m1	n1	t2	o1
type **B**	12	75	42 -0.005 -0.020	96.5	155	348	163.5	260	45	M12x32
type **S**	-	-	-	-	-	-	-	-	-	-