Technical Data Sheet
Gearbox
WORM GEARBOX SQUARE DESIGN

MODEL	M13	
Ø OUTPUT SHAFT	45	mm
APPROXIMATE RATIO	15	
EXACT RATIO	15.00	
OUTPUT SPEED	97	RPM
EXACT OUTPUT SPEED	97	RPM
INPUT POWER	4.00	KW
INPUT ROTATION	1400	RPM
INPUT PAM	112B5	
OUTPUT TORQUE	356.05	N.m
NOMINAL TORQUE	917.00	N.m
NOMINAL POWER	10.3	KW
SERVICE FACTOR	2.58	
DYNAMIC EFFICIENCY	0.87	

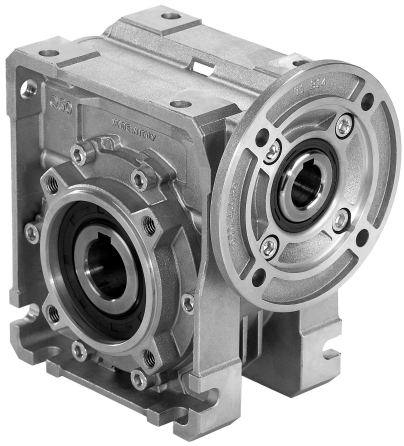

Oil Quantity (L)

B3/H1	B6/H4	B7/H3	B8/H2	V5/H5	V6/H6
4.5	3.5	3.5	3.3	4.5	3.3

Radial and Axial Loads

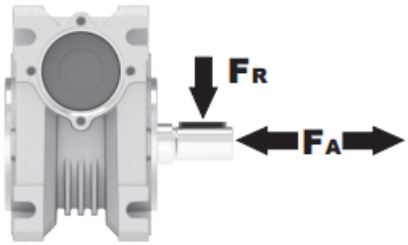

n_2 [min-1]	FA [N]	FR [N]
200	960	4800
100	1240	6200
50	1560	7800
15	2400	12000

Universal Motors S.A.
Rua Comendador Brandão, 484
4495-375 Póvoa de Varzim
geral@universalmotors.pt
TEL.: 252 299 080

Universal Motors UK, Ltd
Unit E2, Meltham Mills Road
West Yorkshire HD9 4AR
enquiries@universalmotors-group.co.uk
TEL.: +44(0) 1484660222

Universal Motors SL
C/La Habana n.6 nave 4 Pl Camporroso
28806 Alcala de Henares
info@universalmotors-group.es
TEL.: 918 864 213

PM13**FB**... Basic wormbox
Riduttore base

Gearbox weight peso riduttore: **48.0 kg**

M. flanges	Kit code	øF	A
90B5	KM13.4.041	200	180
100/112B5	KM13.4.042	250	180
132B5	KM13.4.043	300	180

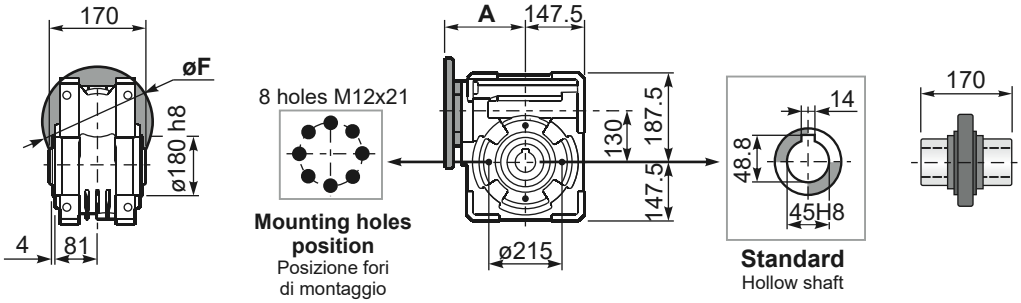

PM13**FC**... Square flange
Flangia quadrata

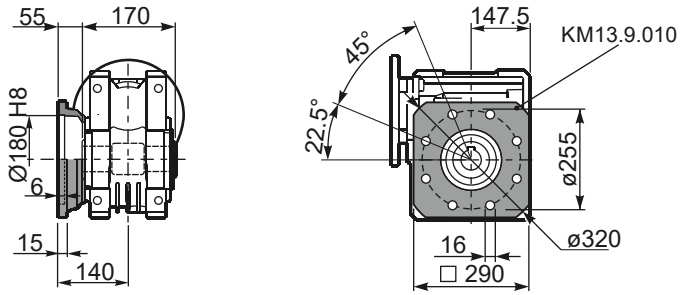

PM13**FB**... Feet
Piedini

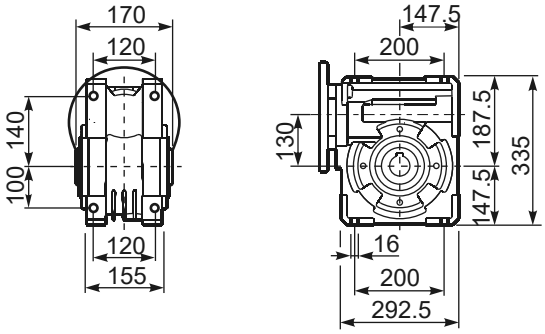

PM13**BR**... Reaction arm
Braccio di reazione

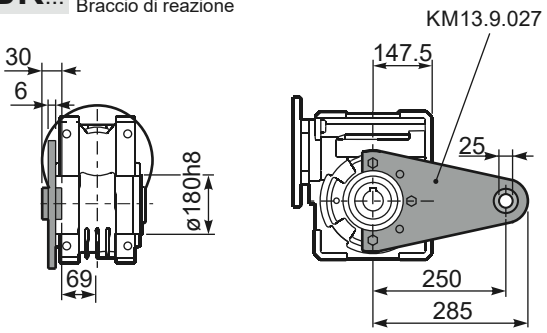

PM13.....**S**... Single Shaft
Albero lento semplice

PM13.....**D**... Double Shaft
Albero lento bisp.

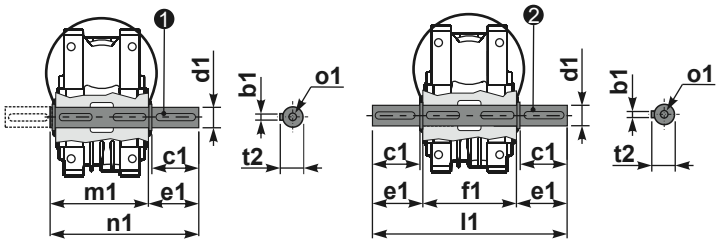

❶ kit cod. KM13.5.028 type **B**

❷ kit cod. KM13.5.029 type **B**

	b1	c1	d1	e1	f1	l1	m1	n1	t2	o1
type	14	80	$45^{-0.005}_{-0.020}$	85	170	340	180	265	48.5	M16
type	-	-	-	-	-	-	-	-	-	-