Technical Data Sheet
Gearbox
# WORM GEARBOX SQUARE DESIGN

| | | |
|---|---|---|
| MODEL | M15 | |
| Ø OUTPUT SHAFT | 50 | mm |
| APPROXIMATE RATIO | 15 | |
| EXACT RATIO | 15.00 | |
| OUTPUT SPEED | 97 | RPM |
| EXACT OUTPUT SPEED | 97 | RPM |
| INPUT POWER | 15.00 | KW |
| INPUT ROTATION | 1400 | RPM |
| INPUT PAM | 160B5 | |
| OUTPUT TORQUE | 1350.54 | N.m |
| NOMINAL TORQUE | 1250.00 | N.m |
| NOMINAL POWER | 13.9 | KW |
| SERVICE FACTOR | 0.93 | |
| DYNAMIC EFFICIENCY | 0.88 | |

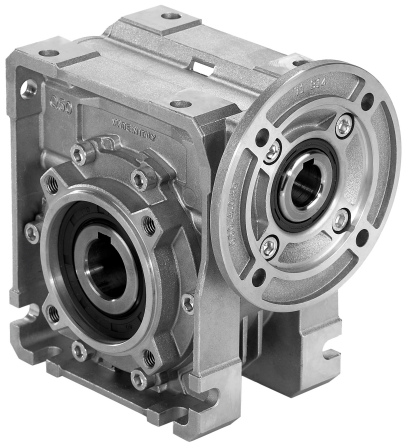

## Oil Quantity (L)

| B3/H1 | B6/H4 | B7/H3 | B8/H2 | V5/H5 | V6/H6 |
|---|---|---|---|---|---|
| 7 | 5.4 | 5.4 | 5.1 | 7 | 5.1 |

## Radial and Axial Loads

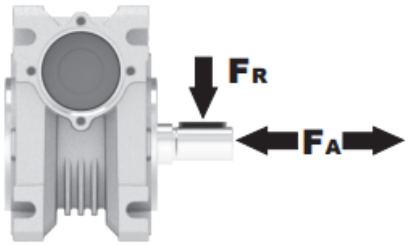


| $n_2$ [min-1] | FA [N] | FR [N] |
|---|---|---|
| 200 | 1300 | 6500 |
| 100 | 1640 | 8200 |
| 50 | 2120 | 10600 |
| 15 | 3300 | 16500 |

Universal Motors S.A.
Rua Comendador Brandão, 484
4495-375 Póvoa de Varzim
geral@universalmotors.pt
TEL.: 252 299 080

Universal Motors UK, Ltd
Unit E2, Meltham Mills Road
West Yorkshire HD9 4AR
enquiries@universalmotors-group.co.uk
TEL.: +44(0) 1484660222

Universal Motors SL
C/La Habana n.6 nave 4 Pl Camporroso
28806 Alcala de Henares
info@universalmotors-group.es
TEL.: 918 864 213

## PM15**FB**... Basic wormbox
Riduttore base

**Gearbox weight** peso riduttore: **84.0 kg**

| M. flanges | Kit code | øF | A |
|---|---|---|---|
| **100/112B5** | KM15.4.042 | 250 | 210 |
| **132B5** | KM15.4.043 | 300 | 210 |
| **160B5** | KM15.4.044 | 350 | 210 |

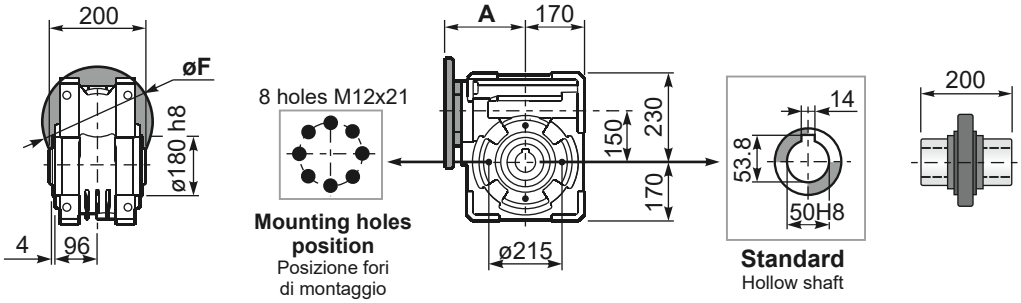


## PM15**FC**... Square flange
Flangia quadrata

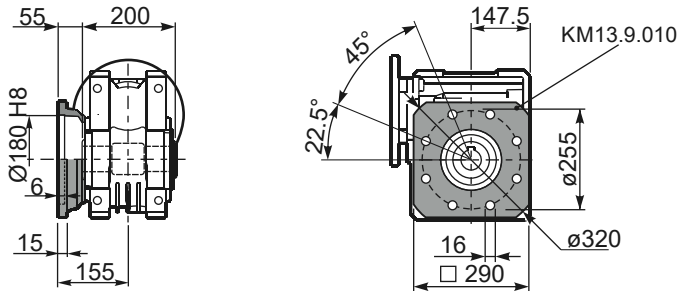


## PM15**FB**... Feet
Piedini

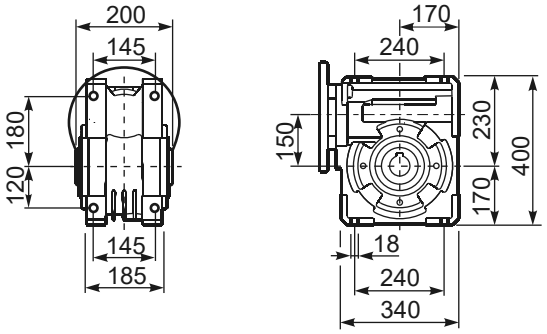


## PM15**BR**... Reaction arm
Braccio di reazione

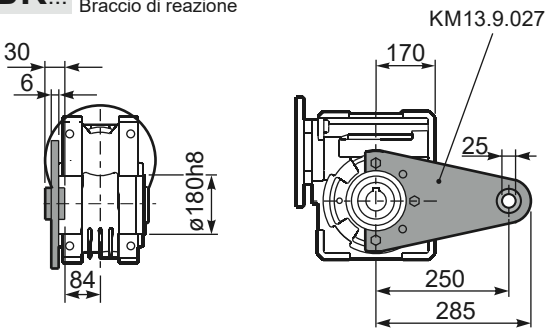


## PM15.....**S**... Single Shaft
Albero lento semplice

## PM15.....**D**... Double Shaft
Albero lento bisp.

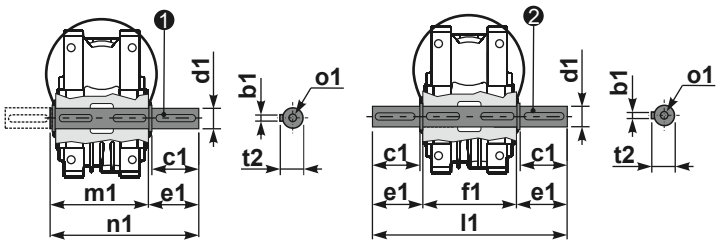


❶ kit cod. KM15.5.028 type **B**

❷ kit cod. KM15.5.029 type **B**

| | b1 | c1 | d1 | e1 | f1 | l1 | m1 | n1 | t2 | o1 |
|---|---|---|---|---|---|---|---|---|---|---|
| type | 14 | 82 | $50^{-0.005}_{-0.020}$ | 87 | 200 | 374 | 210 | 297 | 53.5 | M16 |
| type | - | - | - | - | - | - | - | - | - | - |