Technical Data Sheet
Gearbox
WORM GEARBOX SQUARE DESIGN

MODEL	M15	
Ø OUTPUT SHAFT	50	mm
APPROXIMATE RATIO	40	
EXACT RATIO	40.00	
OUTPUT SPEED	37	RPM
EXACT OUTPUT SPEED	37	RPM
INPUT POWER	5.50	KW
INPUT ROTATION	1400	RPM
INPUT PAM	132B5	
OUTPUT TORQUE	1170.47	N.m
NOMINAL TORQUE	1550.00	N.m
NOMINAL POWER	7.3	KW
SERVICE FACTOR	1.33	
DYNAMIC EFFICIENCY	0.78	

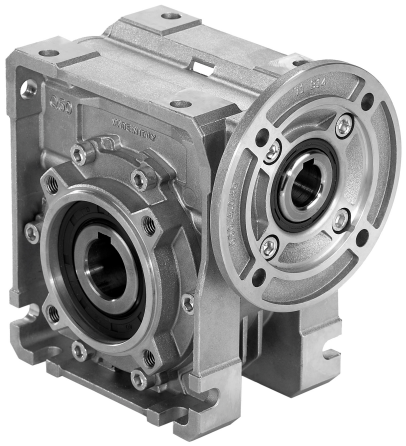

Oil Quantity (L)

B3/H1	B6/H4	B7/H3	B8/H2	V5/H5	V6/H6
7	5.4	5.4	5.1	7	5.1

Radial and Axial Loads

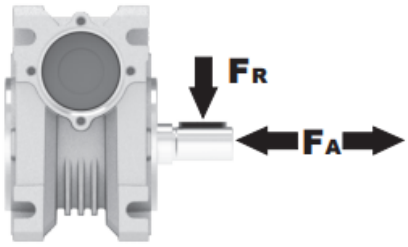

n_2 [min-1]	FA [N]	FR [N]
200	1300	6500
100	1640	8200
50	2120	10600
15	3300	16500

Universal Motors S.A.
Rua Comendador Brandão, 484
4495-375 Póvoa de Varzim
geral@universalmotors.pt
TEL.: 252 299 080

Universal Motors UK, Ltd
Unit E2, Meltham Mills Road
West Yorkshire HD9 4AR
enquiries@universalmotors-group.co.uk
TEL.: +44(0) 1484660222

Universal Motors SL
C/La Habana n.6 nave 4 Pl Camporroso
28806 Alcala de Henares
info@universalmotors-group.es
TEL.: 918 864 213

PM15**FB**... Basic wormbox
Riduttore base

Gearbox weight peso riduttore: **84.0 kg**

M. flanges	Kit code	øF	A
100/112B5	KM15.4.042	250	210
132B5	KM15.4.043	300	210
160B5	KM15.4.044	350	210

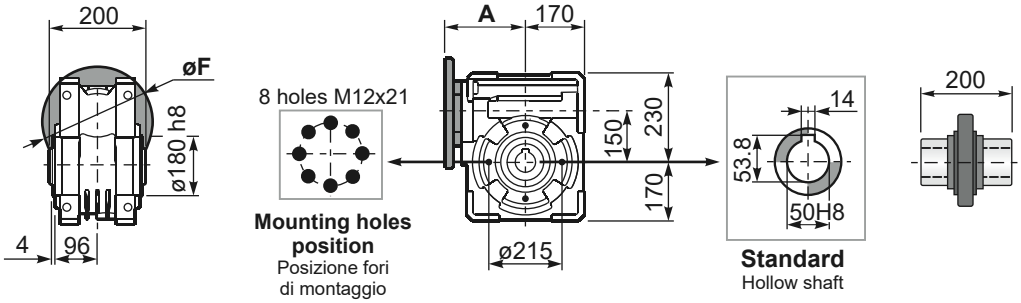

PM15**FC**... Square flange
Flangia quadrata

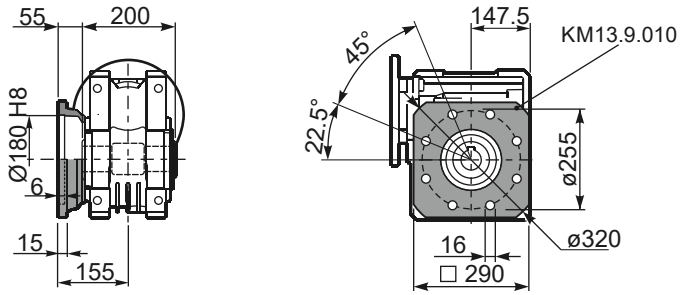

PM15**FB**... Feet
Piedini

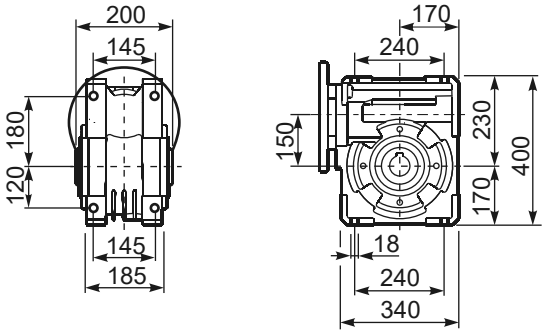

PM15**BR**... Reaction arm
Braccio di reazione

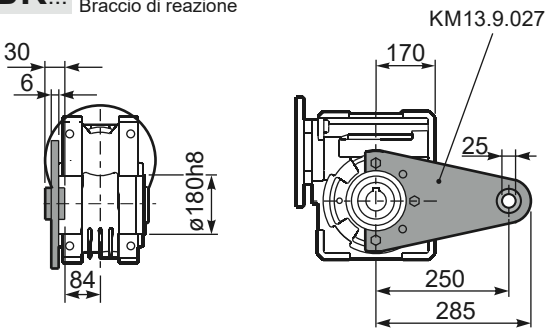

PM15.....**S**... Single Shaft
Albero lento semplice

PM15.....**D**... Double Shaft
Albero lento bisp.

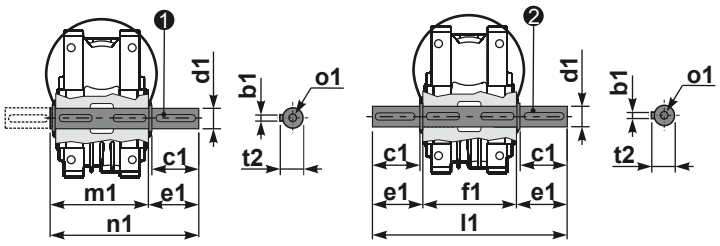

❶ kit cod. KM15.5.028 type **B**

❷ kit cod. KM15.5.029 type **B**

	b1	c1	d1	e1	f1	l1	m1	n1	t2	o1
type	14	82	$50^{-0.005}_{-0.020}$	87	200	374	210	297	53.5	M16
type	-	-	-	-	-	-	-	-	-	-