Ficha Técnica
Reductor de velocidad
ORTOGONAL

| | | |
|---|---|---|
| MODELO | X62A | |
| Ø EJE DE SALIDA | 35 | mm |
| RELACIÓN APROXIMADA | 17 | |
| RELACIÓN EXACTA | 17.46 | |
| VELOCIDAD DE SALIDA | 86 | RPM |
| VELOCIDAD DE SALIDA EXACTA | 84 | RPM |
| POTENCIA DE ENTRADA | 2.20 | KW |
| ROTACIÓN DE ENTRADA | 1400 | RPM |
| PAM DE ENTRADA | 100B5 | |
| PAR DE SALIDA | 251.53 | N.m |
| PAR NOMINAL | 400.00 | N.m |
| POTENCIA NOMINAL | 3.5 | KW |
| FACTOR DE SERVICIO | 1.59 | |
| EFICIENCIA DINÁMICA | 0.96 | |

## Cantidad de Aceite (L)

| B3/H1 | B6/H4 | B7/H3 | B8/H2 | V5/H5 | V6/H6 |
|---|---|---|---|---|---|
| 1.25 | 1.7 | 0.95 | 1.6 | 2.45 | 1.5 |

## Cargas Radiales y Axiales

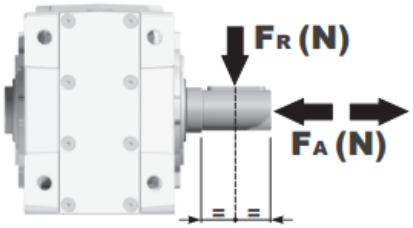


| $n_2$ [min-1] | FA [N] | FR [N] |
|---|---|---|
| 250 | 600 | 3000 |
| 100 | 780 | 3900 |
| 50 | 1140 | 5700 |
| 15 | 1660 | 8300 |

Universal Motors S.A.
Rua Comendador Brandão, 484
4495-375 Póvoa de Varzim
geral@universalmotors.pt
TEL.: 252 299 080

Universal Motors UK, Ltd
Unit E2, Meltham Mills Road
West Yorkshire HD9 4AR
enquiries@universalmotors-group.co.uk
TEL.: +44(0) 1484660222

Universal Motors SL
C/La Habana n.6 nave 4 Pl Camporroso
28806 Alcala de Henares
info@universalmotors-group.es
TEL.: 918 864 213

## **P**X62AC... Basic Gearbox
Riduttore base

**Gearbox weight** peso riduttore **15.80 kg**

| M. flanges | Kit code | øF | A |
|---|---|---|---|
| **71B5** | K023.4.041 | 160 | 253 |
| **80/90B5** | K023.4.042 | 200 | 255 |
| **100/112B5** | K023.4.043 | 250 | 264 |
| **132B5** | KC50.4.043 | 300 | 282 |
| | | | |
| **80B14** | K085.4.046 | 120 | 255 |
| **90B14** | K085.4.045 | 140 | 255 |
| **100/112B14** | K085.4.047 | 160 | 264 |
| **132B14** | KC50.4.041 | 200 | 282 |

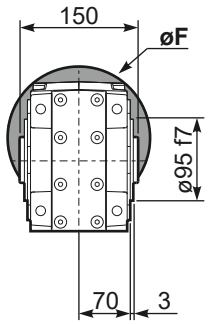


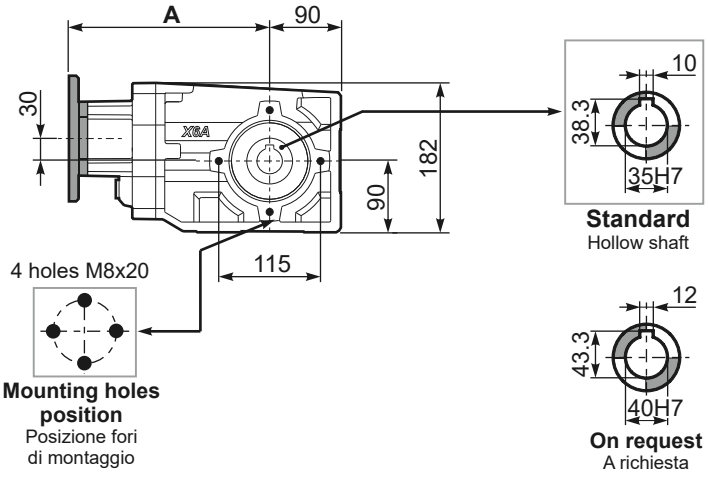


## PX62A...**FB**.. Feet
Piedini

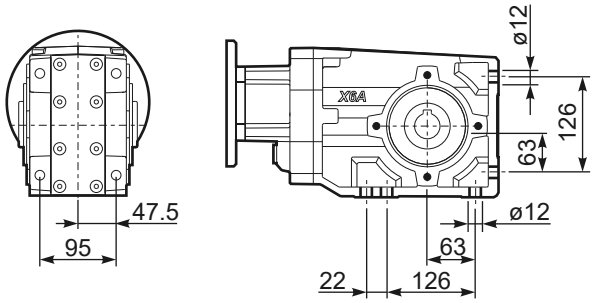


## PX62A...**-F2**.. Output flange
Flangia uscita

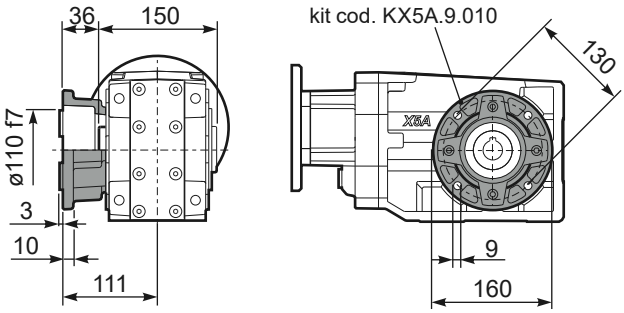


## PX62A...**-F3**.. Output flange
Flangia uscita

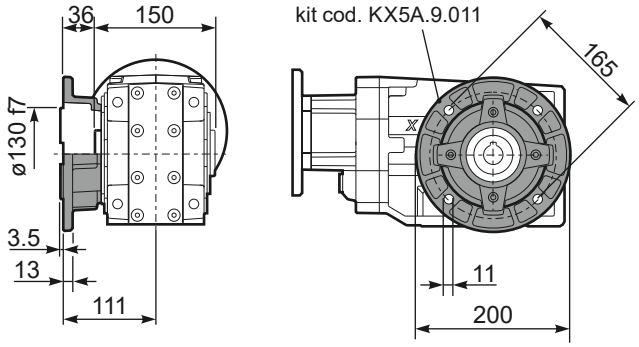


## PX62A...**-F4**.. Output flange
Flangia uscita

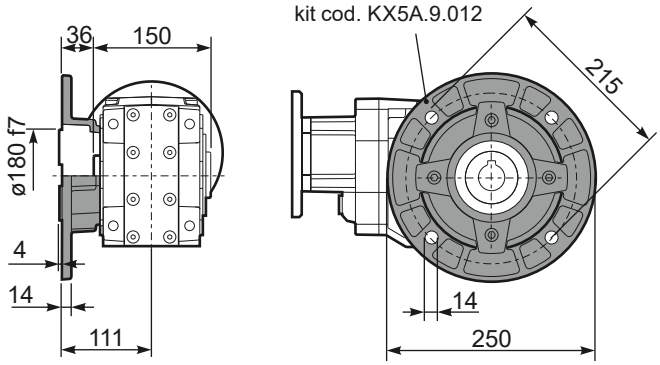


## **R**X62A... Input shaft
Albero in entrata

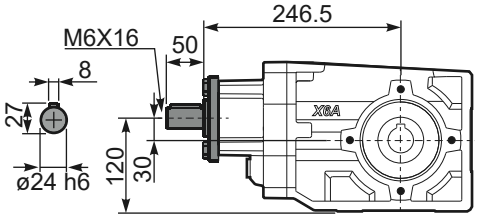


## PX62A...**BR**.. Reaction Arm
Braccio di reazione

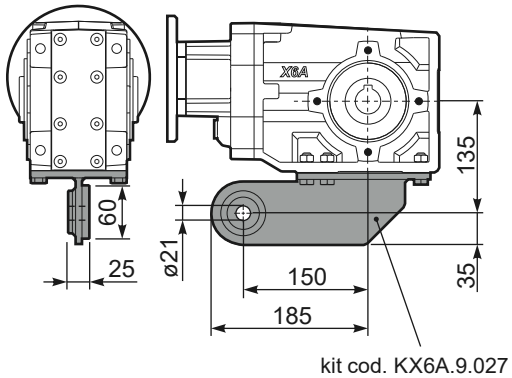


## PX62A**A**.. Single output shaft
Albero semplice in uscita

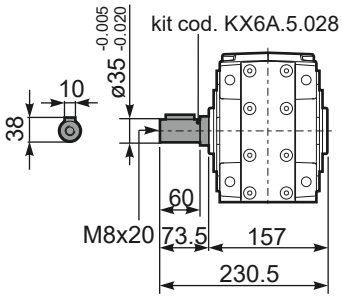


9