Ficha Técnica
Reductor de velocidad
SIN-FIN CORONA REDONDO

| | | |
|---|---|---|
| MODELO | 030 | |
| Ø EJE DE SALIDA | 14 | mm |
| RELACIÓN APROXIMADA | 20 | |
| RELACIÓN EXACTA | 20.00 | |
| VELOCIDAD DE SALIDA | 73 | RPM |
| VELOCIDAD DE SALIDA EXACTA | 73 | RPM |
| POTENCIA DE ENTRADA | 0.12 | KW |
| ROTACIÓN DE ENTRADA | 1400 | RPM |
| PAM DE ENTRADA | 63B5 | |
| PAR DE SALIDA | 11.46 | N.m |
| PAR NOMINAL | 19.00 | N.m |
| POTENCIA NOMINAL | 0.2 | KW |
| FACTOR DE SERVICIO | 1.67 | |
| EFICIENCIA DINÁMICA | 0.70 | |

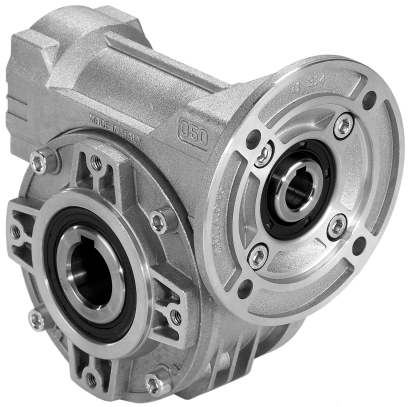

## Cantidad de Aceite (L)

| B3/H1 | B6/H4 | B7/H3 | B8/H2 | V5/H5 | V6/H6 |
|---|---|---|---|---|---|
| 0.03 | 0.03 | 0.03 | 0.03 | 0.03 | 0.03 |

## Cargas Radiales y Axiales

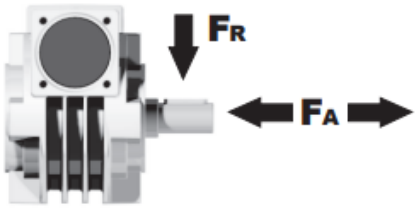


| $n_2$ [min-1] | FA [N] | FR [N] |
|---|---|---|
| 200 | 120 | 600 |
| 100 | 160 | 800 |
| 50 | 200 | 1000 |
| 15 | 280 | 1400 |

Universal Motors S.A.
Rua Comendador Brandão, 484
4495-375 Póvoa de Varzim
geral@universalmotors.pt
TEL.: 252 299 080

Universal Motors UK, Ltd
Unit E2, Meltham Mills Road
West Yorkshire HD9 4AR
enquiries@universalmotors-group.co.uk
TEL.: +44(0) 1484660222

Universal Motors SL
C/La Habana n.6 nave 4 PI Camporroso
28806 Alcala de Henares
info@universalmotors-group.es
TEL.: 918 864 213

## P030**FB**... Basic wormbox
Riduttore base

| M. flanges | Kit code | øF | A |
|---|---|---|---|
| **56B5** | K030.4.041 | 120 | 61.5 |
| **63B5** | K030.4.042 | 140 | 62.5 |
| | | | |
| **56B14** | K030.4.046 | 80 | 61.5 |
| **63B14** | K030.4.045 | 90 | 62.5 |

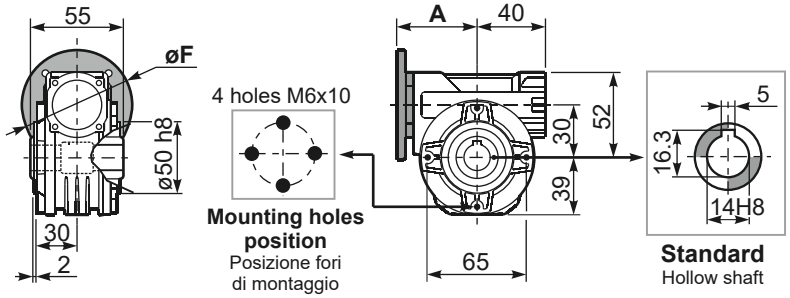


**Gearbox weight** peso riduttore: **1.05 kg**

## P030**PA**... Feet
Piedini

## P030**PB**... Feet
Piedini

## P030**PV**... Feet
Piedini

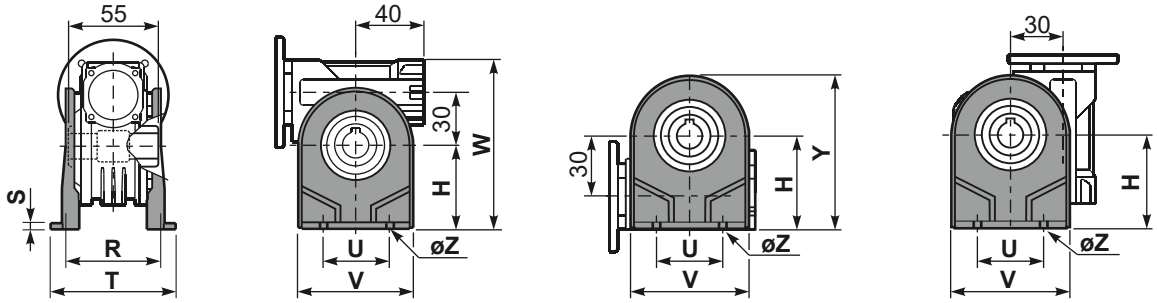


| | H | R | S | T | U | V | Y | W | øZ | kit code |
|---|---|---|---|---|---|---|---|---|---|---|
| type **B** | 55 | 66 | 3 | 87 | 50 | 78 | 94 | 107 | ø6.5 | K030.9.022 |
| type **S** | 52 | 66 | 3 | 87 | 52 | 90 | 91 | 104 | ø6.5 | KS030.9.023 |

## P030**FC**... Output flange
Flangia uscita

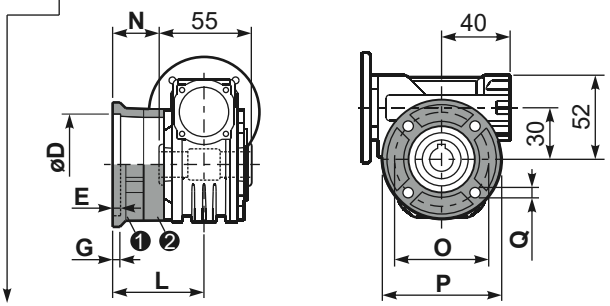


| type **B** | øD | E | G | L | N | O | P | Q | kit code |
|---|---|---|---|---|---|---|---|---|---|
| **FC** | $50^{+0.15}_{+0.05}$ | 6 | 6 | 50.5 | 23 | 68 | 80 | 7 | ❶ K030.9.010<br>❷ - |
| **FL** | $60^{+0.15}_{+0.05}$ | 6 | 6 | 55.5 | 28 | 87 | 110 | 8.5 | ❶ K045.9.010<br>❷ - |

| type **S** | øD | E | G | L | N | O | P | Q | kit code |
|---|---|---|---|---|---|---|---|---|---|
| **F1** | $40^{+0.15}_{+0.10}$ | 3.5 | 5.5 | 49 | 21.5 | 56 | 80 | 6.5 | ❶ KS030.9.012<br>❷ - |

## **R**030FB... Input shaft
Albero in entrata

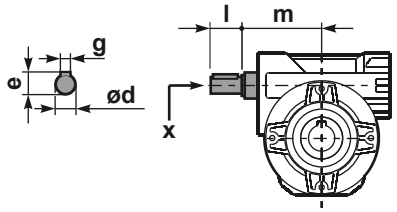


| | ød | e | g | l | m | x | kit code |
|---|---|---|---|---|---|---|---|
| type **B** | 9 h6 | 10.2 | 3 | 20 | 58 | - | K030.5.006 PAM63 |
| type **S** | - | - | - | - | - | - | - |

## P030**BR**... Reaction arm
Braccio di reazione

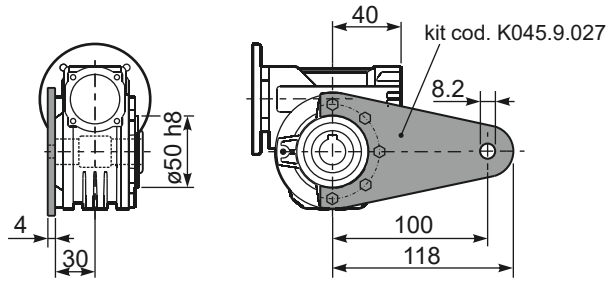


## P030.....**S**... Single Shaft
Albero lento semplice

## P030.....**D**... Double Shaft
Albero lento bisp.

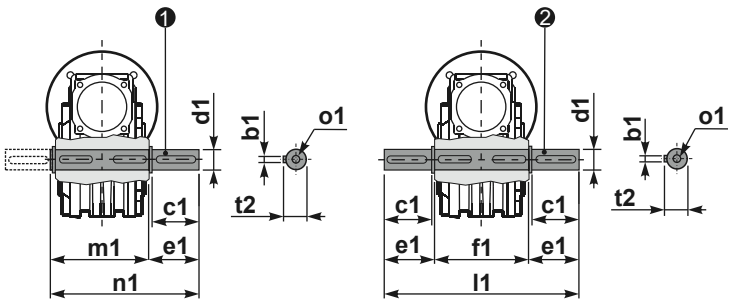


❶ kit cod. K030.5.028 type **B**

❷ kit cod. K030.5.029 type **B**

| | b1 | c1 | d1 | e1 | f1 | l1 | m1 | n1 | t2 | o1 |
|---|---|---|---|---|---|---|---|---|---|---|
| type **B** | 5 | 25 | $14^{-0.005}_{-0.020}$ | 35.5 | 55 | 126 | 59 | 94.5 | 16 | M5x14 |
| type **S** | - | - | - | - | - | - | - | - | - | - |