Ficha Técnica
Reductor de velocidad
SIN-FIN CORONA REDONDO

| | | |
|---|---|---|
| MODELO | 110 | |
| Ø EJE DE SALIDA | 42 | mm |
| RELACIÓN APROXIMADA | 85 | |
| RELACIÓN EXACTA | 84.00 | |
| VELOCIDAD DE SALIDA | 17 | RPM |
| VELOCIDAD DE SALIDA EXACTA | 17 | RPM |
| POTENCIA DE ENTRADA | 0.55 | KW |
| ROTACIÓN DE ENTRADA | 1400 | RPM |
| PAM DE ENTRADA | 80B5 | |
| PAR DE SALIDA | 204.83 | N.m |
| PAR NOMINAL | 494.00 | N.m |
| POTENCIA NOMINAL | 1.3 | KW |
| FACTOR DE SERVICIO | 2.36 | |
| EFICIENCIA DINÁMICA | 0.65 | |

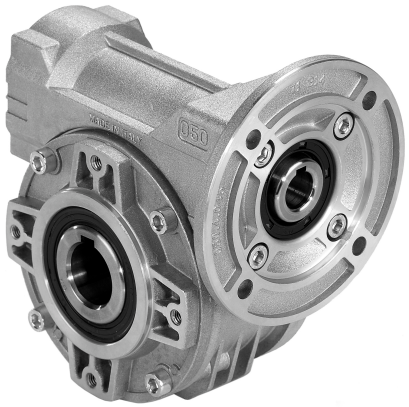

## Cantidad de Aceite (L)

| B3/H1 | B6/H4 | B7/H3 | B8/H2 | V5/H5 | V6/H6 |
|---|---|---|---|---|---|
| 1.9 | 1.35 | 1.35 | 2 | 2 | 2 |

## Cargas Radiales y Axiales

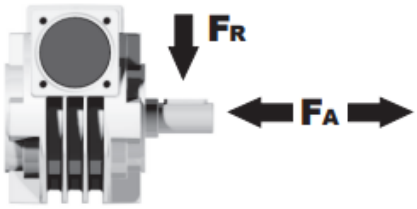


| $n_2$ [min-1] | FA [N] | FR [N] |
|---|---|---|
| 200 | 600 | 2900 |
| 100 | 750 | 3600 |
| 50 | 920 | 4600 |
| 15 | 1400 | 7000 |

Universal Motors S.A.
Rua Comendador Brandão, 484
4495-375 Póvoa de Varzim
geral@universalmotors.pt
TEL.: 252 299 080

Universal Motors UK, Ltd
Unit E2, Meltham Mills Road
West Yorkshire HD9 4AR
enquiries@universalmotors-group.co.uk
TEL.: +44(0) 1484660222

Universal Motors SL
C/La Habana n.6 nave 4 PI Camporroso
28806 Alcala de Henares
info@universalmotors-group.es
TEL.: 918 864 213

## P110**FB**... Basic wormbox
Riduttore base

| M. flanges | Kit code | øF | A |
|---|---|---|---|
| **71B5** | K023.4.041 | 160 | 136 |
| **80/90B5** | K023.4.042 | 200 | 138 |
| **100/112B5** | K023.4.043 | 250 | 147 |
| **132B5** | - | 300 | 187 |
| | | | |
| **80B14** | K085.4.046 | 120 | 138 |
| **90B14** | K085.4.045 | 140 | 138 |
| **100/112B14** | K023.4.041 | 160 | 136 |
| **132B14** | - | 200 | 187 |

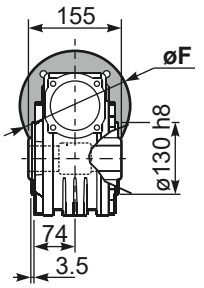


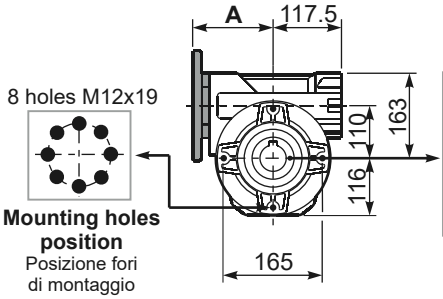


**Mounting holes position**
Posizione fori di montaggio

**Standard**
Hollow shaft

**On request**
A richiesta

**Gearbox weight** peso riduttore **35.00 kg**

## P110**PA**... Feet
Piedini

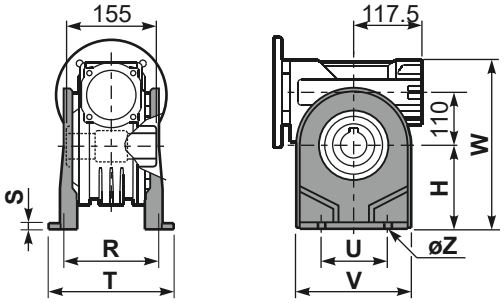


## P110**PB**... Feet
Piedini

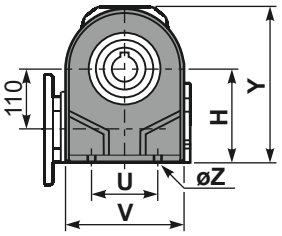


## P110**PV**... Feet
Piedini

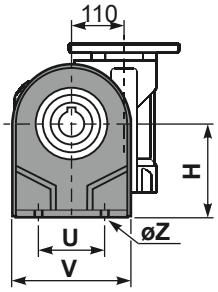


| | H | R | S | T | U | V | Y | W | øZ | kit code |
|---|---|---|---|---|---|---|---|---|---|---|
| type **B** | 170 | 180 | 8 | 224 | 200 | 240 | 286 | 333 | ø13 | K110.9.022 |
| type **S** | - | - | - | - | - | - | - | - | - | - |

## P110**FC**... Output flange
Flangia uscita

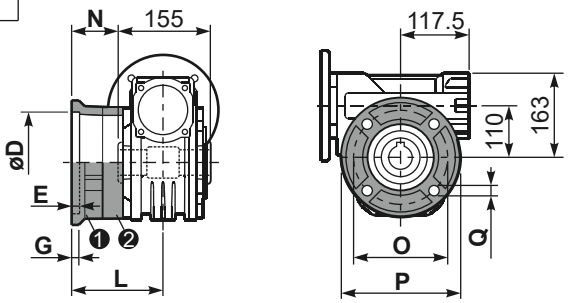


| type **B** | øD | E | G | L | N | O | P | Q | kit code |
|---|---|---|---|---|---|---|---|---|---|
| **FC** | 170 +0.083 +0.043 | 11 | 16.5 | 131.5 | 54 | 230 | 270 | 13 | ❶ K110.9.010<br>❷ - |
| **FL** | 170 +0.083 +0.043 | 11 | 16.5 | 179.5 | 102 | 230 | 270 | 13 | ❶ K110.9.011<br>❷ - |

| type **S** | øD | E | G | L | N | O | P | Q | kit code |
|---|---|---|---|---|---|---|---|---|---|
| **F1** | 180 +0.040 0 | 5 | 18 | 150 | 72.5 | 215 | 250 | 15 | ❶ KS110.9.014<br>❷ - |
| **F3** | 180 +0.040 0 | 5 | 18 | 130 | 52.5 | 215 | 250 | 15 | ❶ KS110.9.013<br>❷ - |

## P110**BR**... Reaction arm
Braccio di reazione

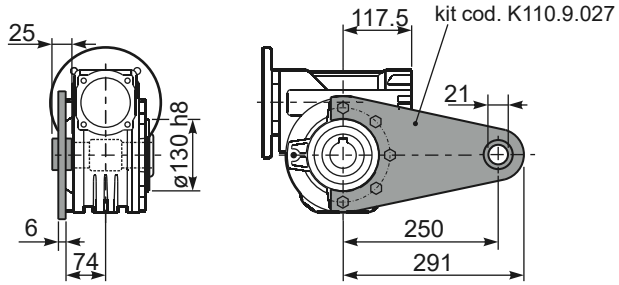


## P110.....**S**... Single Shaft
Albero lento semplice

## P110.....**D**... Double Shaft
Albero lento bisp.

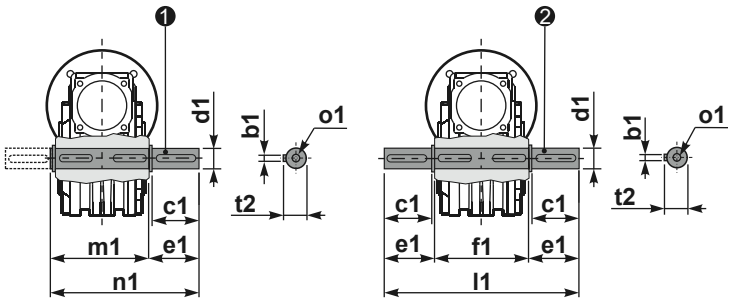


❶ kit cod. K110.5.028 type **B**

❷ kit cod. K110.5.029 type **B**

## **R**110FB... Input shaft
Albero in entrata

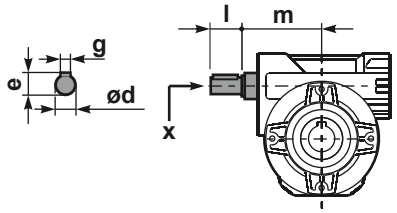


| | ød | e | g | l | m | x | kit code |
|---|---|---|---|---|---|---|---|
| type **B** | 25 h6 | 28 | 8 | 50 | 131.5 | M8x20 | ❶ K085.5.007 PAM90<br>❷ K085.5.008 PAM100 |
| type **S** | 24 h6 | 27 | 8 | 50 | 131.5 | M8x20 | ❶ KS085.5.009 PAM90<br>❷KS085.5.011 PAM100 |

| | b1 | c1 | d1 | e1 | f1 | l1 | m1 | n1 | t2 | o1 |
|---|---|---|---|---|---|---|---|---|---|---|
| type **B** | 12 | 75 | 42 -0.005 -0.020 | 96.5 | 155 | 348 | 163.5 | 260 | 45 | M12x32 |
| type **S** | - | - | - | - | - | - | - | - | - | - |