Ficha Técnica
Reductor de velocidad
# REDUCTOR EN LINEA

| | | |
|---|---|---|
| MODELO | 411A | |
| Ø EJE DE SALIDA | 19 | mm |
| RELACIÓN APROXIMADA | 3.5 | |
| RELACIÓN EXACTA | 3.29 | |
| VELOCIDAD DE SALIDA | 417 | RPM |
| VELOCIDAD DE SALIDA EXACTA | 444 | RPM |
| POTENCIA DE ENTRADA | 0.55 | KW |
| ROTACIÓN DE ENTRADA | 1400 | RPM |
| PAM DE ENTRADA | 80B5 | |
| PAR DE SALIDA | 11.36 | N.m |
| PAR NOMINAL | 38.00 | N.m |
| POTENCIA NOMINAL | 1.7 | KW |
| FACTOR DE SERVICIO | 3.09 | |
| EFICIENCIA DINÁMICA | 0.92 | |

## Cantidad de Aceite (L)

| B3/H1 | B6/H4 | B7/H3 | B8/H2 | V5/H5 | V6/H6 |
|---|---|---|---|---|---|
| 0.1 | 0.1 | 0.1 | 0.1 | 0.1 | 0.1 |

## Cargas Radiales y Axiales

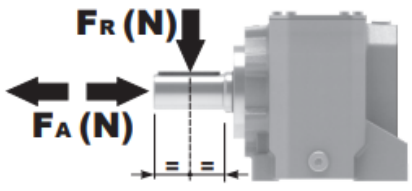


| $n_2$ [min-1] | FA [N] | FR [N] |
|---|---|---|
| 700 | 182 | 910 |
| 400 | 230 | 1150 |
| 200 | 290 | 1450 |
| 140 | 320 | 1600 |

Universal Motors S.A.
Rua Comendador Brandão, 484
4495-375 Póvoa de Varzim
geral@universalmotors.pt
TEL.: 252 299 080

Universal Motors UK, Ltd
Unit E2, Meltham Mills Road
West Yorkshire HD9 4AR
enquiries@universalmotors-group.co.uk
TEL.: +44(0) 1484660222

Universal Motors SL
C/La Habana n.6 nave 4 Pl Camporroso
28806 Alcala de Henares
info@universalmotors-group.es
TEL.: 918 864 213

## P411-F... Output flange
flange di uscita

| Gearbox weight peso riduttore | 3.20 kg |
|---|---|

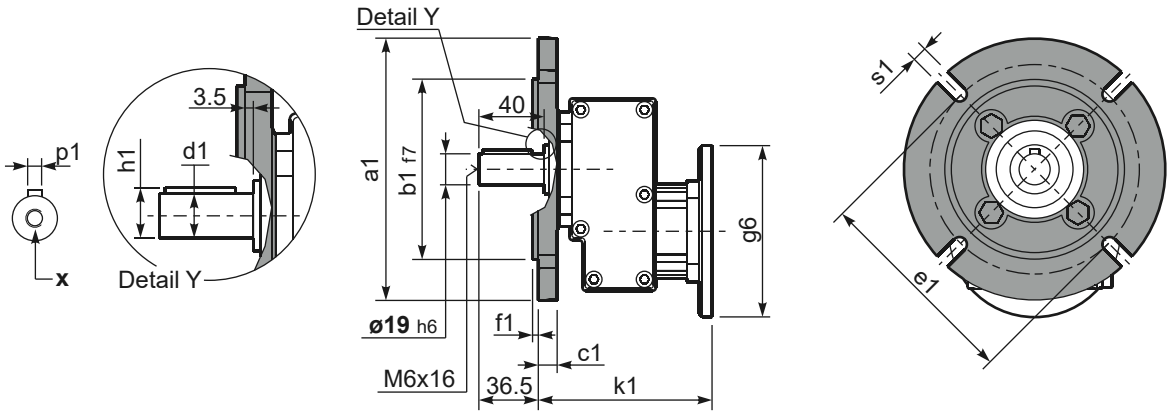


***Available output shaft** / Albero di uscita

| | Shaft - d1 | p1 | h1 | x |
|---|---|---|---|---|
| Standard | ø 19x40 | 6 | 21.5 | M6x16 |
| On request<br>A richiesta | ø 14x30<br>ø 24x40 | 5<br>8 | 16<br>27 | M5x13<br>M6x16 |

**Available output flanges** / flange di uscita

| a1 ø | b1 | c1 | e1 | f1 | s1 | kit code |
|---|---|---|---|---|---|---|
| 120 | 80 | 11.5 | 100 | 3 | 9* | KC30.9.010 |
| 140 | 95 | 11.5 | 115 | 3 | 9 | KC30.9.011 |
| 160 | 110 | 11.5 | 130 | 3.5 | 9 | KC30.9.012 |
| 200 | 130 | 11.5 | 165 | 3.5 | 11 | KC30.9.013 |

*Holes position
posizione fori

## P411-H1... With feet
Con piedini

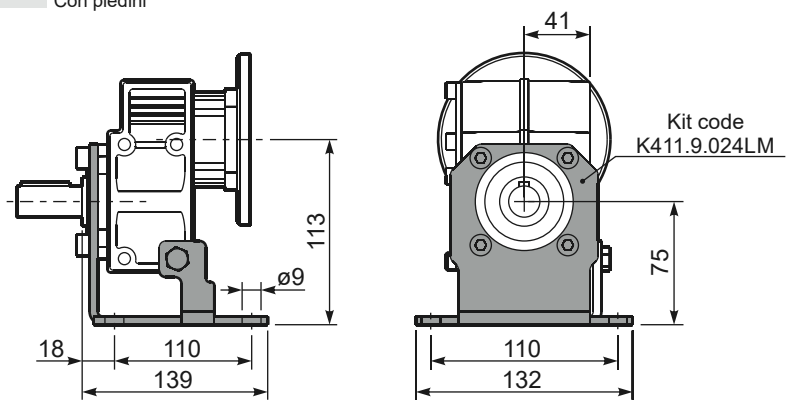


## R411-N... Input Shaft
Albero in entrata

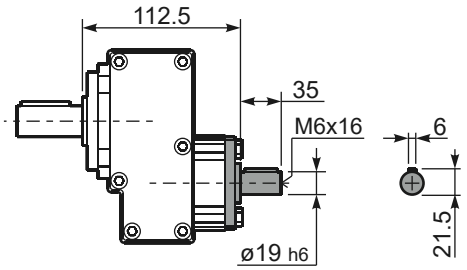


## P411-N... Basic gearbox
Riduttore base

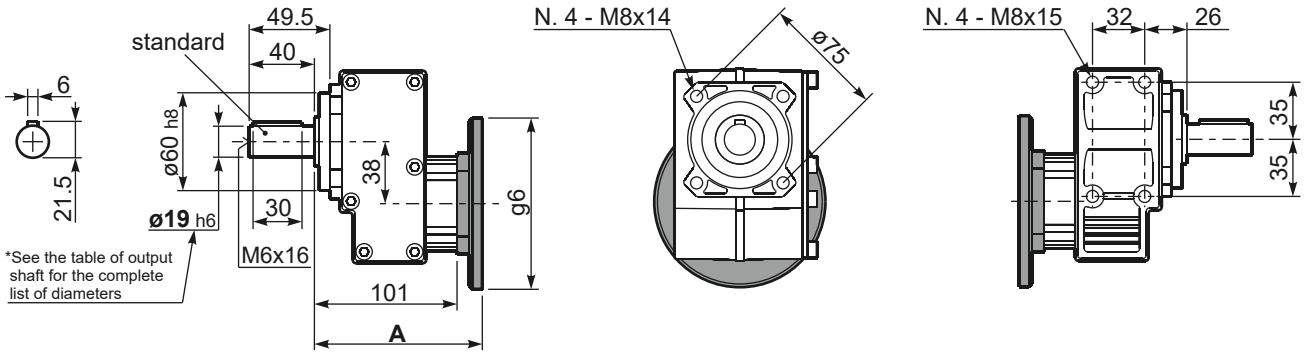


| B5 Motor Flanges | A | g6 | k1 | kit code |
|---|---|---|---|---|
| 63 B5 | 121.5 | 140 | 125 | K063.4.041 |
| 71 B5 | 119.5 | 160 | 123 | K063.4.042 |
| 80/90 B5 | 121.5 | 200 | 125 | K063.4.043 |

| B14 Motor Flanges | A | g6 | k1 | kit code |
|---|---|---|---|---|
| 71 B14 | 119.5 | 105 | 123 | K063.4.047 |
| 80 B14 | 121.5 | 120 | 125 | K063.4.046 |
| 90 B14 | 121.5 | 140 | 125 | K063.4.041 |