Ficha Técnica
Reductor de velocidad
# REDUCTOR EN LINEA

| | | |
|---|---|---|
| MODELO | 202A | |
| Ø EJE DE SALIDA | 16 | mm |
| RELACIÓN APROXIMADA | 3.5 | |
| RELACIÓN EXACTA | 3.44 | |
| VELOCIDAD DE SALIDA | 417 | RPM |
| VELOCIDAD DE SALIDA EXACTA | 424 | RPM |
| POTENCIA DE ENTRADA | 0.18 | KW |
| ROTACIÓN DE ENTRADA | 1400 | RPM |
| PAM DE ENTRADA | 63B14 | |
| PAR DE SALIDA | 4.05 | N.m |
| PAR NOMINAL | 25.00 | N.m |
| POTENCIA NOMINAL | 1.1 | KW |
| FACTOR DE SERVICIO | 6.11 | |
| EFICIENCIA DINÁMICA | 0.96 | |

## Cantidad de Aceite (L)

| B3/H1 | B6/H4 | B7/H3 | B8/H2 | V5/H5 | V6/H6 |
|---|---|---|---|---|---|
| 0.15 | 0.15 | 0.15 | 0.15 | 0.15 | 0.15 |

## Cargas Radiales y Axiales

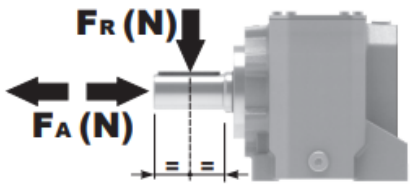


| $n_2$ [min-1] | FA [N] | FR [N] |
|---|---|---|
| 300 | 140 | 700 |
| 200 | 185 | 924 |
| 120 | 270 | 1350 |
| 70 | 340 | 1700 |

Universal Motors S.A.
Rua Comendador Brandão, 484
4495-375 Póvoa de Varzim
geral@universalmotors.pt
TEL.: 252 299 080

Universal Motors UK, Ltd
Unit E2, Meltham Mills Road
West Yorkshire HD9 4AR
enquiries@universalmotors-group.co.uk
TEL.: +44(0) 1484660222

Universal Motors SL
C/La Habana n.6 nave 4 Pl Camporroso
28806 Alcala de Henares
info@universalmotors-group.es
TEL.: 918 864 213

| Gearbox weight peso riduttore | With flange 3.3 kg<br>With feet 3.7 Kg |
|---|---|

## P202A**B1**... With feet / Con piedini

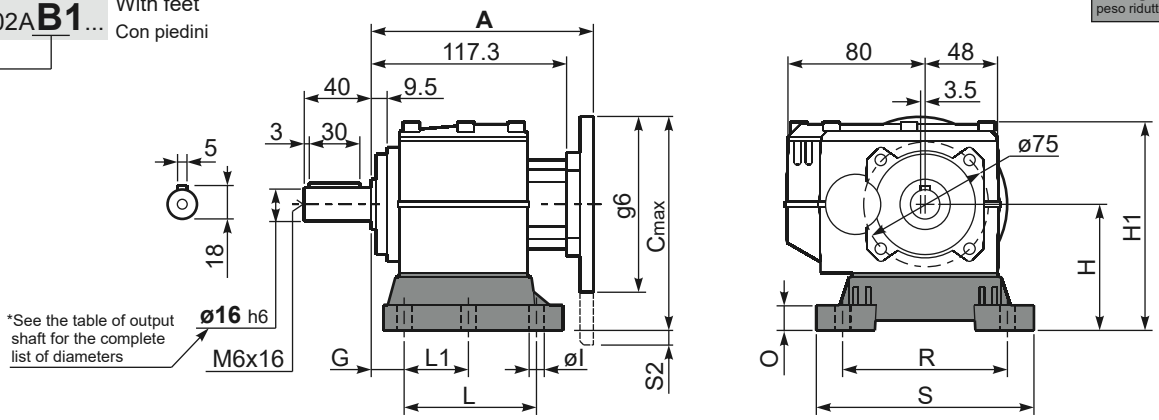


| Feet Code | Market reference | G | H | R | L | L1 | S | H1 | O | øl | S2 only with motor flange | B5 max. Flange | kit code |
|---|---|---|---|---|---|---|---|---|---|---|---|---|---|
| B1 | 112 | 18 | 85 | 110 | 87 | 50 | 130 | 133 | 15 | 9 | - | - | KC30.9.022 |
| B2 | 212/3 | 18 | 100 | 130 | 107.5 | 60 | 155 | 145 | 5 | 11 | - | - | KC30.9.023LM |
| S1 | 17-32 | 18 | 75 | 110 | 110 | 50 | 130 | 123 | 15 | 9 | - | 63B5 | KC30.9.024 |

Other feet are available, see our web site
Sono disponibili altri piedini, consulta il nostro sito web

**A see on page bottom**

Most popular types
Tipi più diffusi

## P202A-**F**... Output flanges / flange di uscita

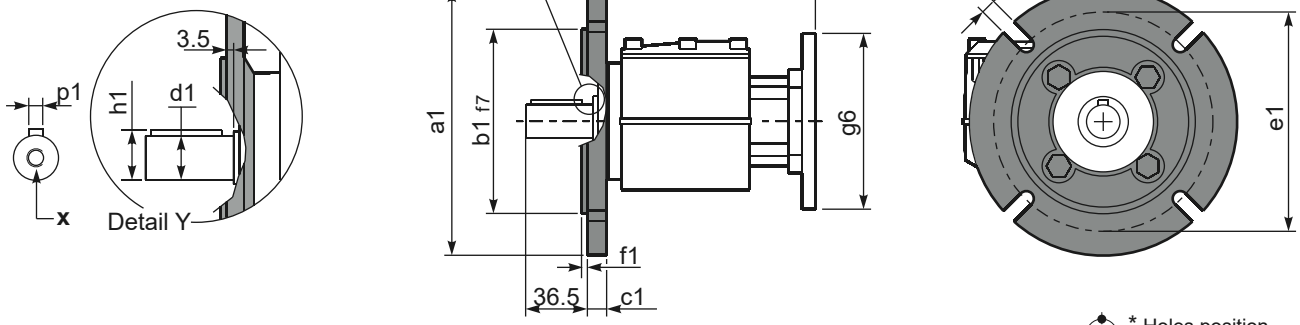


***Available output shaft** / Albero di uscita

| | Shaft - d1 | p1 | h1 | x |
|---|---|---|---|---|
| Standard | ø 16x40 | 5 | 18 | M6x16 |
| On request<br>A richiesta | ø 14x30<br>ø 20x40<br>ø 25x50 | 5<br>6<br>8 | 16<br>22.5<br>28 | M6x16<br>M8x19<br>M8x19 |

* Holes position
Posizione fori

**Available output flanges** / flange di uscita

| a1 ø | b1 | c1 | e1 | f1 | s1 | kit code | |
|---|---|---|---|---|---|---|---|
| 120 | 80 | 11.5 | 100 | 3 | 9* | KC30.9.010 | With flange and feet only on request. Ask for compatibility |
| 140 | 95 | 11.5 | 115 | 3 | 9 | KC30.9.011 | |
| 160 | 110 | 11.5 | 130 | 3.5 | 9 | KC30.9.012 | |
| 200 | 130 | 11.5 | 165 | 3.5 | 11 | KC30.9.013 | |

## P202A-**N**... Basic gearbox / Riduttore base

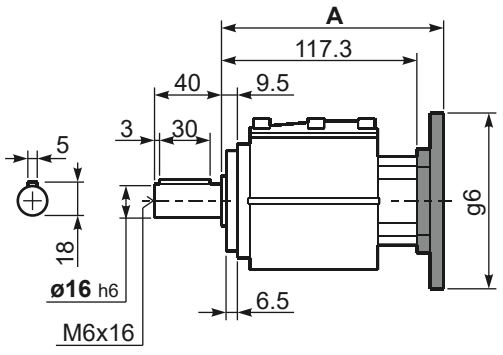


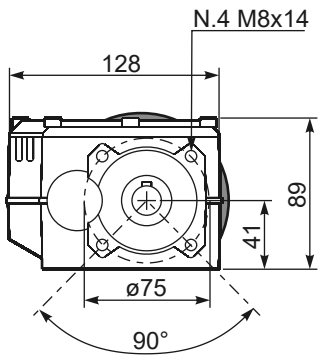


| B5 Motor Flanges | A | $C_{max}$ | g6 | k1 | kit code |
|---|---|---|---|---|---|
| 63 B5 | 135.8 | 170 | 140 | 139.3 | K050.4.041 |
| 71 B5 | 133.3 | 180 | 160 | 136.8 | K050.4.042 |

| B14 Motor Flanges | A | $C_{max}$ | g6 | k1 | kit code |
|---|---|---|---|---|---|
| 56 B14 | 133.3 | 139 | 80 | 136.8 | KC40.4.049 |
| 63 B14 | 135.8 | 146 | 90 | 139.3 | K050.4.047 |
| 71 B14 | 133.3 | 152.5 | 105 | 136.8 | K050.4.045 |

## R202A-**N**... Input Shaft / Albero in entrata

