Ficha Técnica
Reductor de velocidad
# REDUCTOR EN LINEA

| | | |
|---|---|---|
| MODELO | 302A | |
| Ø EJE DE SALIDA | 20 | mm |
| RELACIÓN APROXIMADA | 5.5 | |
| RELACIÓN EXACTA | 5.45 | |
| VELOCIDAD DE SALIDA | 265 | RPM |
| VELOCIDAD DE SALIDA EXACTA | 268 | RPM |
| POTENCIA DE ENTRADA | 1.50 | KW |
| ROTACIÓN DE ENTRADA | 1400 | RPM |
| PAM DE ENTRADA | 90B14 | |
| PAR DE SALIDA | 53.53 | N.m |
| PAR NOMINAL | 52.00 | N.m |
| POTENCIA NOMINAL | 1.5 | KW |
| FACTOR DE SERVICIO | 1.00 | |
| EFICIENCIA DINÁMICA | 0.96 | |

## Cantidad de Aceite (L)

| B3/H1 | B6/H4 | B7/H3 | B8/H2 | V5/H5 | V6/H6 |
|---|---|---|---|---|---|
| 0.15 | 0.15 | 0.15 | 0.15 | 0.15 | 0.15 |

## Cargas Radiales y Axiales

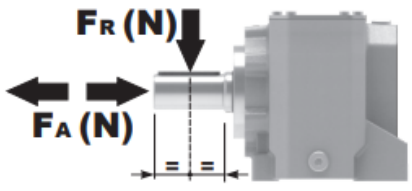


| $n_2$ [min-1] | FA [N] | FR [N] |
|---|---|---|
| 300 | 140 | 700 |
| 200 | 185 | 924 |
| 120 | 270 | 1350 |
| 70 | 340 | 1700 |

Universal Motors S.A.
Rua Comendador Brandão, 484
4495-375 Póvoa de Varzim
geral@universalmotors.pt
TEL.: 252 299 080

Universal Motors UK, Ltd
Unit E2, Meltham Mills Road
West Yorkshire HD9 4AR
enquiries@universalmotors-group.co.uk
TEL.: +44(0) 1484660222

Universal Motors SL
C/La Habana n.6 nave 4 Pl Camporroso
28806 Alcala de Henares
info@universalmotors-group.es
TEL.: 918 864 213

| Gearbox weight peso riduttore | With flange 3.5 kg<br>With feet 4.0 Kg |
|---|---|

P302A**B1**... With feet
Con piedini

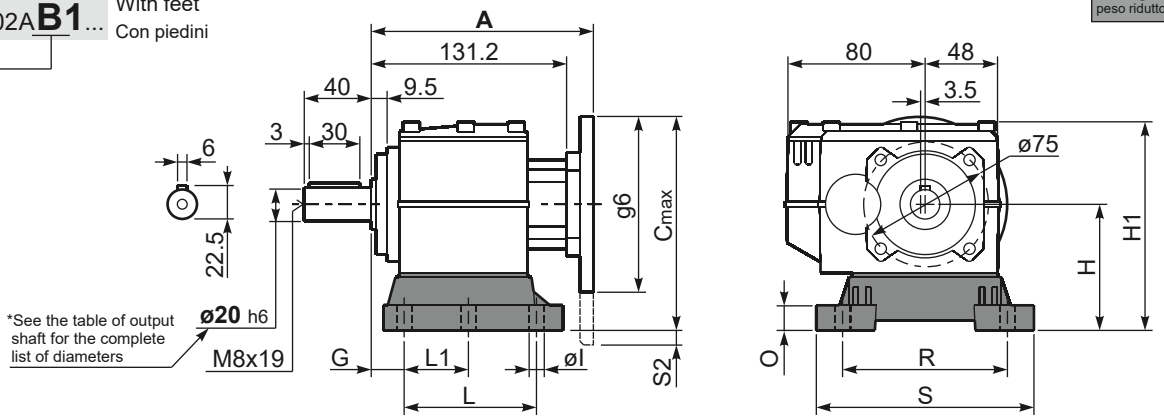


| Feet Code | Market reference | G | H | R | L | L1 | S | H1 | O | øl | S2 only with motor flange | B5 max. Flange | kit code |
|---|---|---|---|---|---|---|---|---|---|---|---|---|---|
| B1 | 112 | 18 | 85 | 110 | 87 | 50 | 130 | 133 | 15 | 9 | 15 80/90B5 | - | KC30.9.022 |
| B2 | 212/3 | 18 | 100 | 130 | 107.5 | 60 | 155 | 145 | 5 | 11 | 3.5 80/90B5 | - | KC30.9.023LM |
| S1 | 17-32 | 18 | 75 | 110 | 110 | 50 | 130 | 123 | 15 | 9 | 5 71B5 | 71B5 | KC30.9.024 |

Other feet are available, see our web site
Sono disponibili altri piedini, consulta il nostro sito web

**A see on page bottom**

Most popular types
Tipi più diffusi

P302A-**F**... Output flanges
flange di uscita

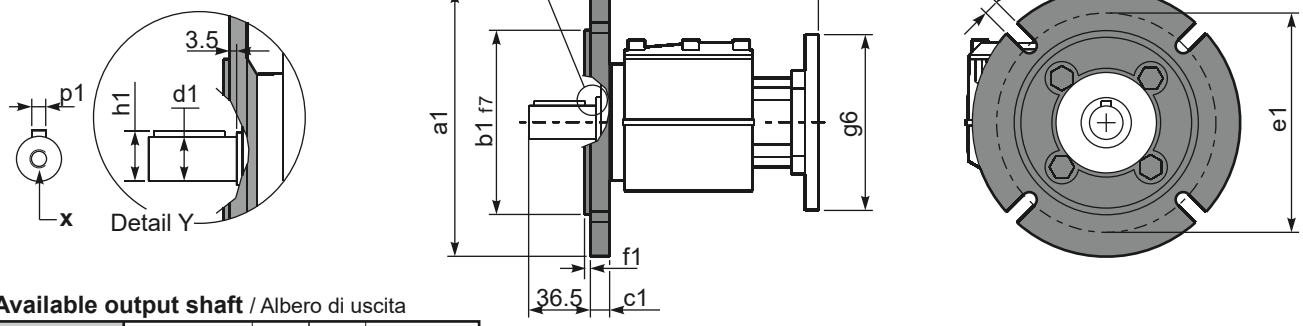


***Available output shaft** / Albero di uscita

| | Shaft - d1 | p1 | h1 | x |
|---|---|---|---|---|
| Standard | ø 20x40 | 6 | 22.5 | M8x19 |
| On request<br>A richiesta | ø 14x30<br>ø 16x40<br>ø 19x40<br>ø 24x50<br>ø 25x50 | 5<br>5<br>6<br>8<br>8 | 16<br>18<br>21.5<br>27<br>28 | M6x16<br>M6x16<br>M6x16<br>M8x19<br>M8x19 |

* Holes position
Posizione fori

**Available output flanges** / flange di uscita

| a1 ø | b1 | c1 | e1 | f1 | s1 | kit code |
|---|---|---|---|---|---|---|
| 120 | 80 | 11.5 | 100 | 3 | 9* | KC30.9.010 |
| 140 | 95 | 11.5 | 115 | 3 | 9 | KC30.9.011 |
| 160 | 110 | 11.5 | 130 | 3.5 | 9 | KC30.9.012 |
| 200 | 130 | 11.5 | 165 | 3.5 | 11 | KC30.9.013 |

With flange and feet only on request. Ask for compatibility

P302A-**N**... Basic gearbox
Riduttore base

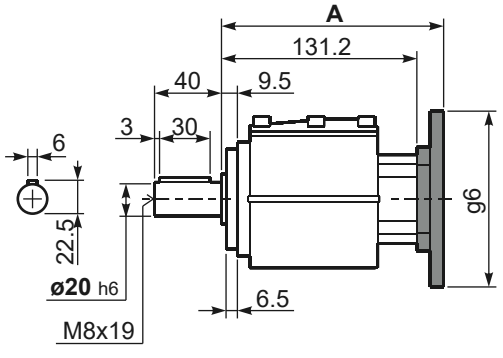


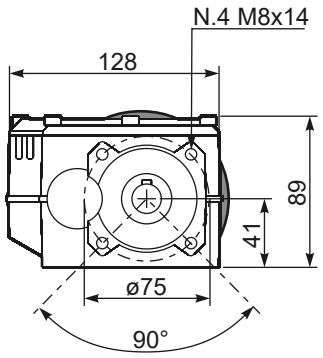


**R**302A-**N**... Input Shaft
Albero in entrata

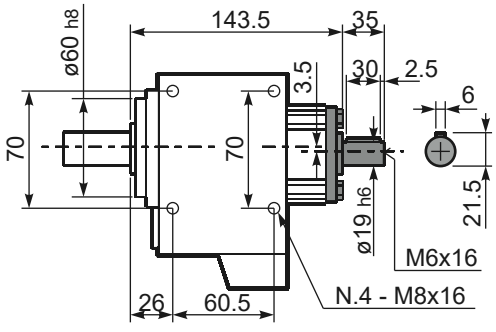


| B5 Motor Flanges | A | $C_{max}$ | g6 | k1 | kit code |
|---|---|---|---|---|---|
| 63 B5 | 151.7 | 170 | 140 | 155.2 | K063.4.041 |
| 71 B5 | 149.7 | 180 | 160 | 153.2 | K063.4.042 |
| 80/90 B5 | 151.7 | 200 | 200 | 155.2 | K063.4.043 |

| B14 Motor Flanges | A | $C_{max}$ | g6 | k1 | kit code |
|---|---|---|---|---|---|
| 71 B14 | 149.7 | 152.5 | 105 | 153.2 | K063.4.047 |
| 80 B14 | 151.7 | 160 | 120 | 155.2 | K063.4.046 |
| 90 B14 | 151.7 | 170 | 140 | 155.2 | K063.4.041 |