Ficha Técnica
Reductor de velocidad
REDUCTOR EN LINEA

MODELO	412A	
Ø EJE DE SALIDA	25	mm
RELACIÓN APROXIMADA	13	
RELACIÓN EXACTA	13.26	
VELOCIDAD DE SALIDA	112	RPM
VELOCIDAD DE SALIDA EXACTA	110	RPM
POTENCIA DE ENTRADA	2.20	KW
ROTACIÓN DE ENTRADA	1400	RPM
PAM DE ENTRADA	100B5	
PAR DE SALIDA	191.02	N.m
PAR NOMINAL	160.00	N.m
POTENCIA NOMINAL	1.8	KW
FACTOR DE SERVICIO	0.82	
EFICIENCIA DINÁMICA	0.96	

Cantidad de Aceite (L)

B3/H1	B6/H4	B7/H3	B8/H2	V5/H5	V6/H6
0.25	0.35	0.4	0.45	0.4	0.5

Cargas Radiales y Axiales

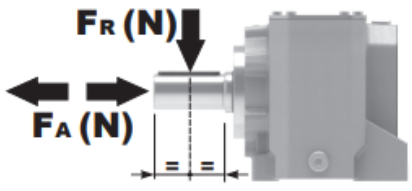

n_2 [min-1]	FA [N]	FR [N]
300	310	1550
200	360	1800
120	448	2240
70	540	2700

Universal Motors S.A.
Rua Comendador Brandão, 484
4495-375 Póvoa de Varzim
geral@universalmotors.pt
TEL.: 252 299 080

Universal Motors UK, Ltd
Unit E2, Meltham Mills Road
West Yorkshire HD9 4AR
enquiries@universalmotors-group.co.uk
TEL.: +44(0) 1484660222

Universal Motors SL
C/La Habana n.6 nave 4 Pl Camporroso
28806 Alcala de Henares
info@universalmotors-group.es
TEL.: 918 864 213

P412A**B1**... With feet / Con piedini

Gearbox weight / peso riduttore	
With flange	**5.7 kg**
With feet	**5.9 Kg**

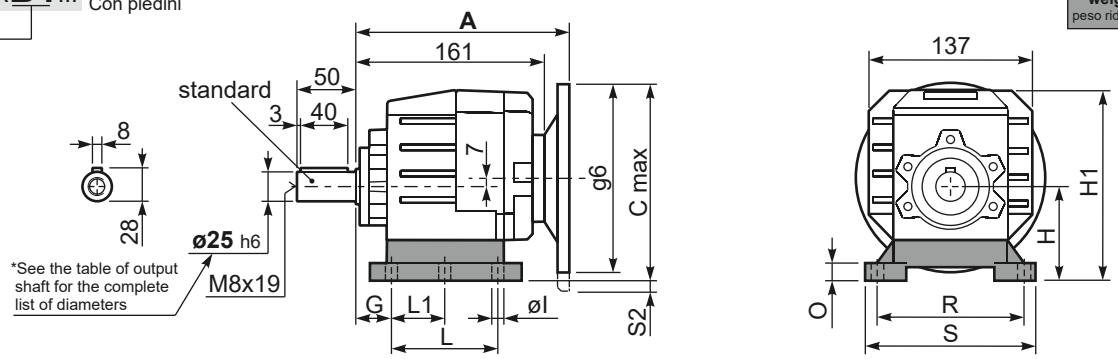

Feet / piedini

Feet Code	Market reference	G	H	R	L	L1	S	H1	O	øl	S2 only with motor flange	B5 max. Flange	kit code
B1	112	18	85	110	87	50	130	167.5	15	-	8 80/90B5 33 100/112B5	-	KC35.9.021
B2	212/3	18	100	130	107.5	60	155	182.5	17	11	18 100/112B5	-	KC40.9.025
S1	17	18	75	110	90÷110	50	145	155.5	15	9	18 80/90B5 43 100/112B5	-	KC40.9.022
S2	27	25	90	110	130	-	145	172.5	20	9	3 80/90B5 28 100/112B5	-	KC40.9.024
H2	022-223	25	100	110	115	-	145	182.5	20	9	18 100/112B5	-	KC40.9.026
M1	42/3	25	80	110÷120	85	-	145	162.5	15	9	13 80/90B5 38 100/112B5	-	KC40.9.023

Other feet are available, see our web site
Sono disponibili altri piedini, consulta il nostro sito web

A see on page bottom

Most popular types
Tipi più diffusi

P412A**-F**... Output flanges / flange di uscita

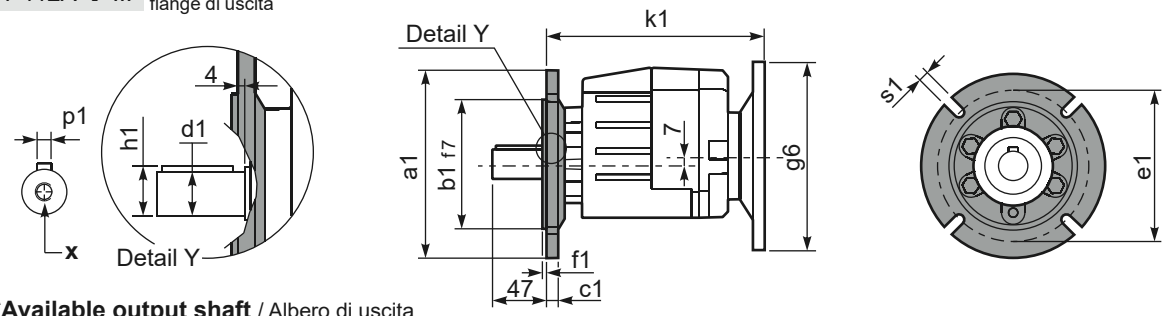

***Available output shaft** / Albero di uscita

	Shaft - d1	p1	h1	x
Standard	ø 25x50	8	28	M8x19
On request A richiesta	ø 16x40	5	18	M6x16
	ø 19x40	6	21.5	M6x16
	ø 20x40	6	22.5	M8x19
	ø 24x50	8	27	M8x19

Available output flanges / flange di uscita

a1 ø	b1	c1	e1	f1	s1	kit code
120	80	10	100	3	7	KC40.9.010
140	95	10	115	3	9	KC40.9.011
160	110	10	130	3.5	9	KC40.9.012
200	130	10	165	3.5	11	KC40.9.013
250	180	11.5	215	3.5	14	KC40.9.014

With flange and feet only on request. Ask for compatibility

P412A**-N**... Basic gearbox / Riduttore base

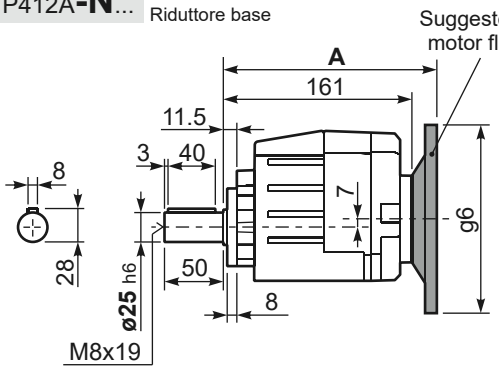

R412A**-N**... Input Shaft / Albero in entrata

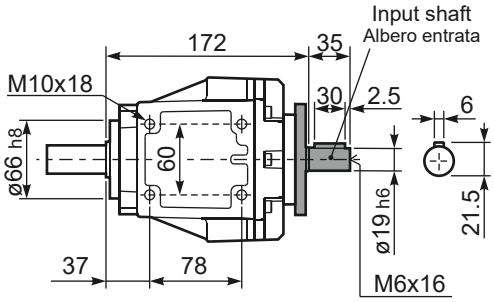

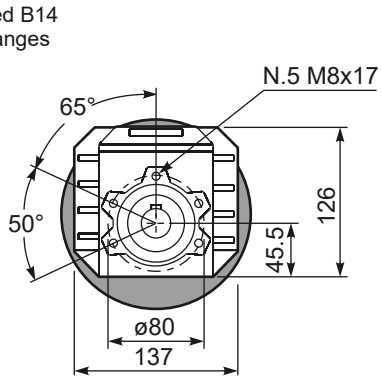

B5 Motor Flanges	A	C_{max}	g6	k1	kit code
63 B5	181.5	177	140	185.5	K063.4.041
71 B5	179.5	187	160	183.5	K063.4.042
80/90 B5	181.5	207	200	185.5	K063.4.043
100/112 B5	196.5	232	250	200.5	KC40.4.043

B14 Motor Flanges	A	C_{max}	g6	k1	kit code
71 B14	179.5	159.5	105	183.5	K063.4.047
80 B14	181.5	167	120	185.5	K063.4.046
90 B14	181.5	177	140	185.5	K063.4.041
100/112 B14	196.5	187	160	200.5	KC40.4.041