Ficha Técnica
Reductor de velocidad
# REDUCTOR EN LINEA

| | | |
|---|---|---|
| MODELO | 412A | |
| Ø EJE DE SALIDA | 25 | mm |
| RELACIÓN APROXIMADA | 18 | |
| RELACIÓN EXACTA | 18.04 | |
| VELOCIDAD DE SALIDA | 81 | RPM |
| VELOCIDAD DE SALIDA EXACTA | 81 | RPM |
| POTENCIA DE ENTRADA | 1.10 | KW |
| ROTACIÓN DE ENTRADA | 1400 | RPM |
| PAM DE ENTRADA | 90B5 | |
| PAR DE SALIDA | 129.94 | N.m |
| PAR NOMINAL | 160.00 | N.m |
| POTENCIA NOMINAL | 1.4 | KW |
| FACTOR DE SERVICIO | 1.27 | |
| EFICIENCIA DINÁMICA | 0.96 | |

## Cantidad de Aceite (L)

| B3/H1 | B6/H4 | B7/H3 | B8/H2 | V5/H5 | V6/H6 |
|---|---|---|---|---|---|
| 0.25 | 0.35 | 0.4 | 0.45 | 0.4 | 0.5 |

## Cargas Radiales y Axiales

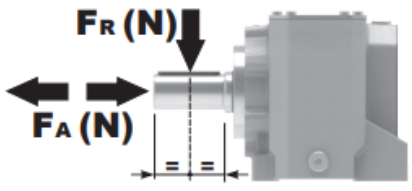


| $n_2$ [min-1] | FA [N] | FR [N] |
|---|---|---|
| 300 | 310 | 1550 |
| 200 | 360 | 1800 |
| 120 | 448 | 2240 |
| 70 | 540 | 2700 |

Universal Motors S.A.
Rua Comendador Brandão, 484
4495-375 Póvoa de Varzim
geral@universalmotors.pt
TEL.: 252 299 080

Universal Motors UK, Ltd
Unit E2, Meltham Mills Road
West Yorkshire HD9 4AR
enquiries@universalmotors-group.co.uk
TEL.: +44(0) 1484660222

Universal Motors SL
C/La Habana n.6 nave 4 Pl Camporroso
28806 Alcala de Henares
info@universalmotors-group.es
TEL.: 918 864 213

## P412A**B1**... With feet / Con piedini

| Gearbox weight / peso riduttore | |
|---|---|
| With flange | **5.7 kg** |
| With feet | **5.9 Kg** |

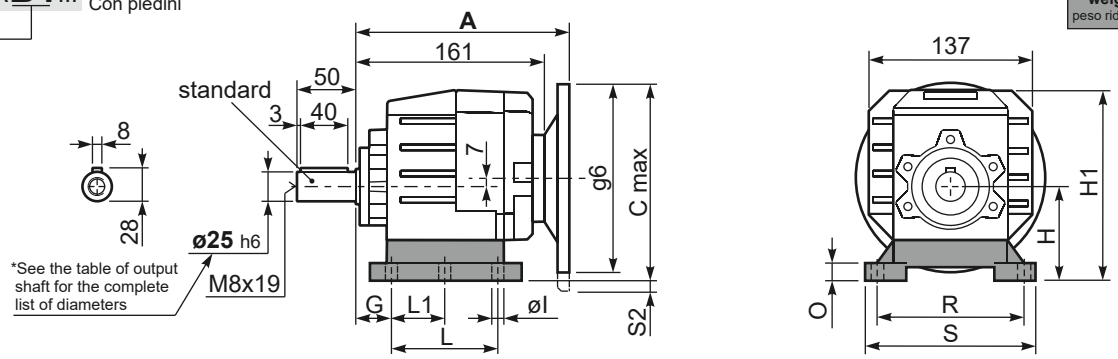


**Feet** / piedini

| Feet Code | Market reference | G | H | R | L | L1 | S | H1 | O | øl | S2 only with motor flange | B5 max. Flange | kit code |
|---|---|---|---|---|---|---|---|---|---|---|---|---|---|
| B1 | 112 | 18 | 85 | 110 | 87 | 50 | 130 | 167.5 | 15 | - | 8 80/90B5<br>33 100/112B5 | - | KC35.9.021 |
| B2 | 212/3 | 18 | 100 | 130 | 107.5 | 60 | 155 | 182.5 | 17 | 11 | 18 100/112B5 | - | KC40.9.025 |
| S1 | 17 | 18 | 75 | 110 | 90÷110 | 50 | 145 | 155.5 | 15 | 9 | 18 80/90B5<br>43 100/112B5 | - | KC40.9.022 |
| S2 | 27 | 25 | 90 | 110 | 130 | - | 145 | 172.5 | 20 | 9 | 3 80/90B5<br>28 100/112B5 | - | KC40.9.024 |
| H2 | 022-223 | 25 | 100 | 110 | 115 | - | 145 | 182.5 | 20 | 9 | 18 100/112B5 | - | KC40.9.026 |
| M1 | 42/3 | 25 | 80 | 110÷120 | 85 | - | 145 | 162.5 | 15 | 9 | 13 80/90B5<br>38 100/112B5 | - | KC40.9.023 |

Other feet are available, see our web site
Sono disponibili altri piedini, consulta il nostro sito web

**A see on page bottom**

Most popular types
Tipi più diffusi

## P412A**-F**... Output flanges / flange di uscita

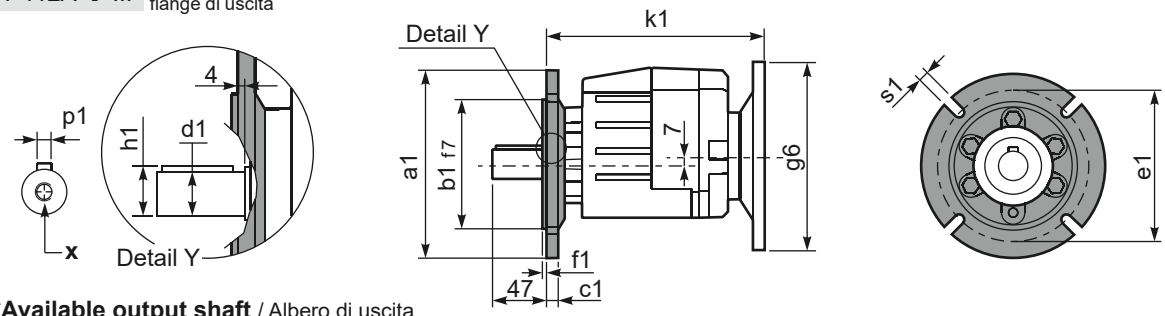


***Available output shaft** / Albero di uscita

| | Shaft - d1 | p1 | h1 | x |
|---|---|---|---|---|
| Standard | ø 25x50 | 8 | 28 | M8x19 |
| On request<br>A richiesta | ø 16x40 | 5 | 18 | M6x16 |
| | ø 19x40 | 6 | 21.5 | M6x16 |
| | ø 20x40 | 6 | 22.5 | M8x19 |
| | ø 24x50 | 8 | 27 | M8x19 |

**Available output flanges** / flange di uscita

| a1 ø | b1 | c1 | e1 | f1 | s1 | kit code |
|---|---|---|---|---|---|---|
| 120 | 80 | 10 | 100 | 3 | 7 | KC40.9.010 |
| 140 | 95 | 10 | 115 | 3 | 9 | KC40.9.011 |
| 160 | 110 | 10 | 130 | 3.5 | 9 | KC40.9.012 |
| 200 | 130 | 10 | 165 | 3.5 | 11 | KC40.9.013 |
| 250 | 180 | 11.5 | 215 | 3.5 | 14 | KC40.9.014 |

With flange and feet only on request. Ask for compatibility

## P412A**-N**... Basic gearbox / Riduttore base

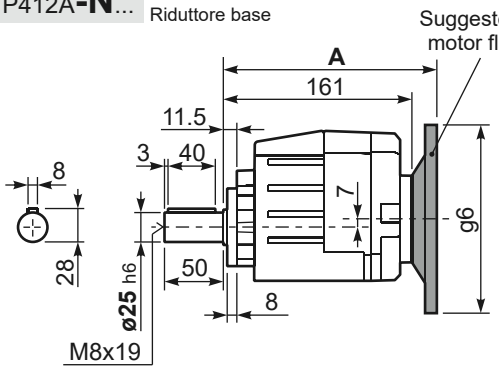


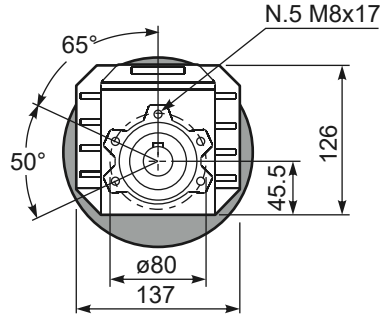


## R412A**-N**... Input Shaft / Albero in entrata

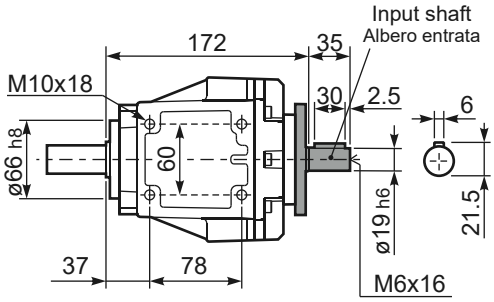


| B5 Motor Flanges | A | $C_{max}$ | g6 | k1 | kit code |
|---|---|---|---|---|---|
| 63 B5 | 181.5 | 177 | 140 | 185.5 | K063.4.041 |
| 71 B5 | 179.5 | 187 | 160 | 183.5 | K063.4.042 |
| 80/90 B5 | 181.5 | 207 | 200 | 185.5 | K063.4.043 |
| 100/112 B5 | 196.5 | 232 | 250 | 200.5 | KC40.4.043 |

| B14 Motor Flanges | A | $C_{max}$ | g6 | k1 | kit code |
|---|---|---|---|---|---|
| 71 B14 | 179.5 | 159.5 | 105 | 183.5 | K063.4.047 |
| 80 B14 | 181.5 | 167 | 120 | 185.5 | K063.4.046 |
| 90 B14 | 181.5 | 177 | 140 | 185.5 | K063.4.041 |
| 100/112 B14 | 196.5 | 187 | 160 | 200.5 | KC40.4.041 |