Ficha Técnica
Reductor de velocidad
REDUCTOR EN LINEA

MODELO	512A	
Ø EJE DE SALIDA	30	mm
RELACIÓN APROXIMADA	4	
RELACIÓN EXACTA	4.23	
VELOCIDAD DE SALIDA	365	RPM
VELOCIDAD DE SALIDA EXACTA	345	RPM
POTENCIA DE ENTRADA	4.00	KW
ROTACIÓN DE ENTRADA	1400	RPM
PAM DE ENTRADA	112B14	
PAR DE SALIDA	110.79	N.m
PAR NOMINAL	170.00	N.m
POTENCIA NOMINAL	6.1	KW
FACTOR DE SERVICIO	1.53	
EFICIENCIA DINÁMICA	0.96	

Cantidad de Aceite (L)

B3/H1	B6/H4	B7/H3	B8/H2	V5/H5	V6/H6
0.7	0.8	1.15	1.2	1.15	1.25

Cargas Radiales y Axiales

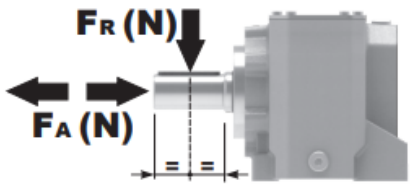

n_2 [min-1]	FA [N]	FR [N]
300	460	2300
200	520	2600
120	620	3100
15	1000	5000

Universal Motors S.A.
Rua Comendador Brandão, 484
4495-375 Póvoa de Varzim
geral@universalmotors.pt
TEL.: 252 299 080

Universal Motors UK, Ltd
Unit E2, Meltham Mills Road
West Yorkshire HD9 4AR
enquiries@universalmotors-group.co.uk
TEL.: +44(0) 1484660222

Universal Motors SL
C/La Habana n.6 nave 4 Pl Camporroso
28806 Alcala de Henares
info@universalmotors-group.es
TEL.: 918 864 213

P512A**B1**... With feet
Con piedini

Gearbox weight peso riduttore	With flange **11.7 kg**
	With feet **11.9 Kg**

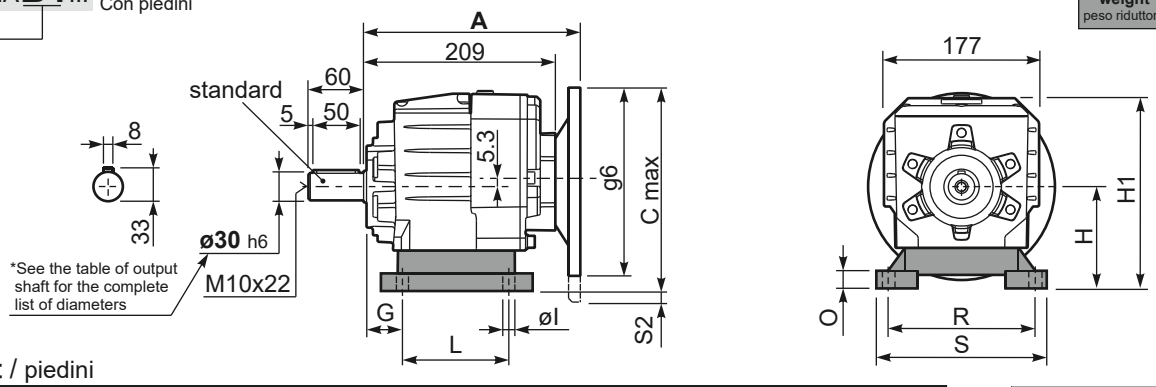

Feet / piedini

Feet Code	Market reference	G	H	R	L	S	H1	O	øl	S2 only with motor flange	B5 max. Flange	kit code
B3	312/3	18	110	160	130	190	211	20	11	10 100/112B5 35 132B5	-	KC50.9.024
B4	30/35	20	130	180	149.5	216	231	18	14	15 132B5	-	KC60.9.024
S4	47-57	30	115	135	165	170	216	25	14	5 100/112B5 30 132B5	-	KC50.9.022
H3	023-233	30	130	135	135	185	231	25	14	15 132B5	-	KC50.9.025
M2	52/3	30	110	135÷150	100	190	211	18	11	10 100/112B5 35 132B5	-	KC50.9.023

Other feet are available, see our web site
Sono disponibili altri piedini, consulta il nostro sito web

A see on page bottom

Most popular types
Tipi più diffusi

P512A-**F**... Output flanges
flange di uscita

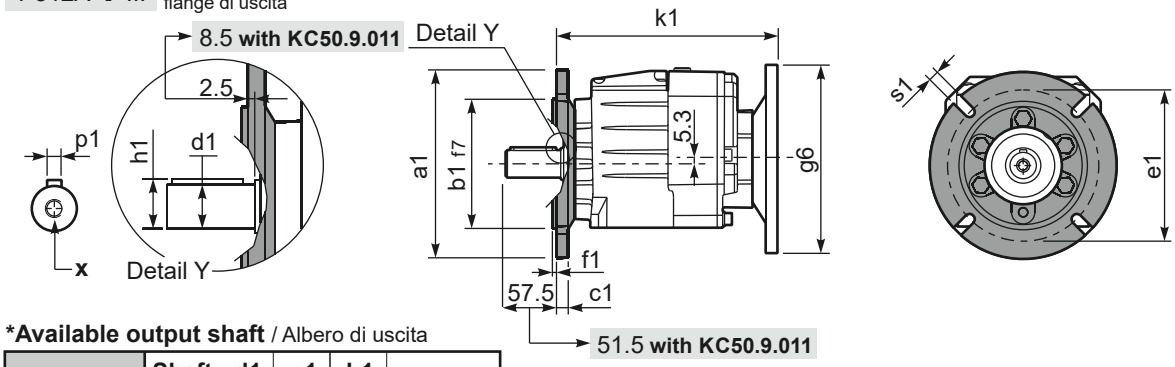

***Available output shaft** / Albero di uscita

	Shaft - d1	p1	h1	x
Standard	ø 30x60	8	33	M10x22
On request A richiesta	ø 24x50	8	27	M8x19
	ø 25x50	8	28	M8x19
	ø 28x60	8	31	M8x19
	ø 35x60	10	38	M10x22

Available output flanges / flange di uscita

a1 ø	b1	c1	e1	f1	s1	kit code
160	110	14	130	3.5	11	KC50.9.011
200	130	13	165	3.5	11	KC50.9.012
250	180	15.5	215	4	14	KC50.9.013

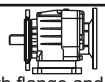

With flange and feet only on request. Ask for compatibility

P512A-**N**... Basic gearbox
Riduttore base

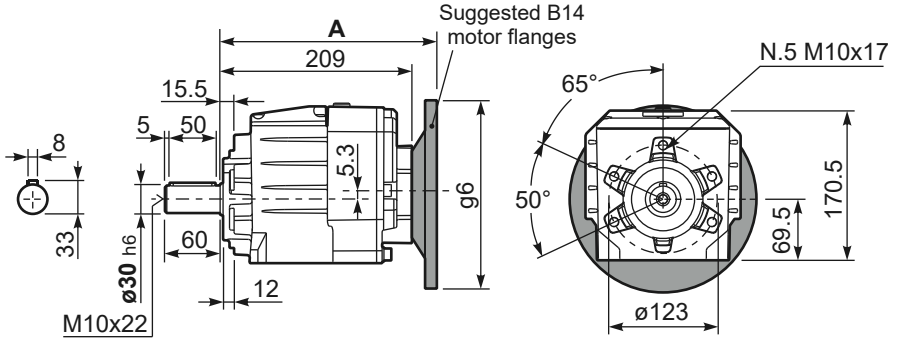

R512A-**N**... Input Shaft
Albero in entrata

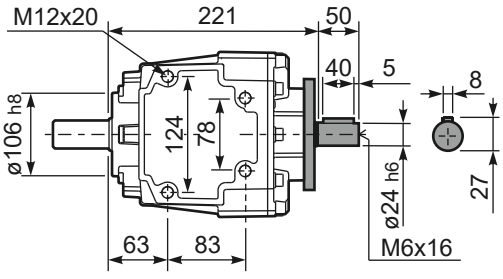

B5 Motor Flanges	A	C_{max}	g6	k1	kit code	k1 with KC50.9.011
71 B5	227.5	215.3	160	230	K023.4.041	236
80/90 B5	229.5	235.3	200	232	K023.4.042	238
100/112 B5	238.5	260.3	250	241	K023.4.043	247
132 B5	259.5	285.3	300	259	KC51.4.043	265

B14 Motor Flanges	A	C_{max}	g6	k1	kit code	k1 with KC50.9.011
80 B14	229.5	195.3	120	232	K085.4.046	238
90 B14	229.5	205.3	140	232	K085.4.045	238
100/112 B14	238.5	215.3	160	241	K085.4.047	247
132 B14	259.5	235.3	200	259	KC51.4.041	265