Ficha Técnica
Reductor de velocidad
# REDUCTOR EN LINEA

| | | |
|---|---|---|
| MODELO | 512A | |
| Ø EJE DE SALIDA | 30 | mm |
| RELACIÓN APROXIMADA | 50 | |
| RELACIÓN EXACTA | 49.00 | |
| VELOCIDAD DE SALIDA | 29 | RPM |
| VELOCIDAD DE SALIDA EXACTA | 30 | RPM |
| POTENCIA DE ENTRADA | 1.10 | KW |
| ROTACIÓN DE ENTRADA | 1400 | RPM |
| PAM DE ENTRADA | 90B5 | |
| PAR DE SALIDA | 352.94 | N.m |
| PAR NOMINAL | 326.00 | N.m |
| POTENCIA NOMINAL | 1 | KW |
| FACTOR DE SERVICIO | 0.91 | |
| EFICIENCIA DINÁMICA | 0.96 | |

## Cantidad de Aceite (L)

| B3/H1 | B6/H4 | B7/H3 | B8/H2 | V5/H5 | V6/H6 |
|---|---|---|---|---|---|
| 0.7 | 0.8 | 1.15 | 1.2 | 1.15 | 1.25 |

## Cargas Radiales y Axiales

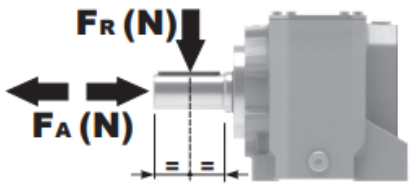


| $n_2$ [min-1] | FA [N] | FR [N] |
|---|---|---|
| 300 | 460 | 2300 |
| 200 | 520 | 2600 |
| 120 | 620 | 3100 |
| 15 | 1000 | 5000 |

Universal Motors S.A.
Rua Comendador Brandão, 484
4495-375 Póvoa de Varzim
geral@universalmotors.pt
TEL.: 252 299 080

Universal Motors UK, Ltd
Unit E2, Meltham Mills Road
West Yorkshire HD9 4AR
enquiries@universalmotors-group.co.uk
TEL.: +44(0) 1484660222

Universal Motors SL
C/La Habana n.6 nave 4 Pl Camporroso
28806 Alcala de Henares
info@universalmotors-group.es
TEL.: 918 864 213

P512A**B1**... With feet
Con piedini

| Gearbox weight peso riduttore | With flange **11.7 kg** |
|---|---|
| | With feet **11.9 Kg** |

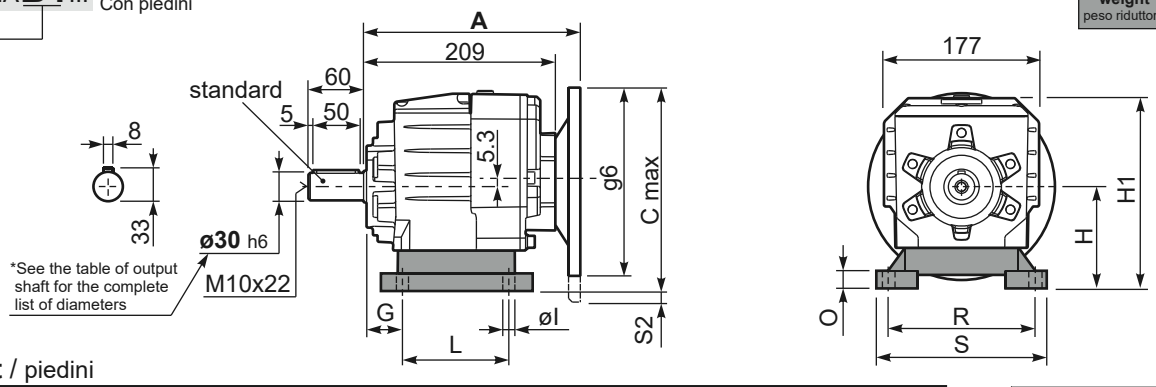


**Feet** / piedini

| Feet Code | Market reference | G | H | R | L | S | H1 | O | øl | S2 only with motor flange | B5 max. Flange | kit code |
|---|---|---|---|---|---|---|---|---|---|---|---|---|
| B3 | 312/3 | 18 | 110 | 160 | 130 | 190 | 211 | 20 | 11 | 10 100/112B5<br>35 132B5 | - | KC50.9.024 |
| B4 | 30/35 | 20 | 130 | 180 | 149.5 | 216 | 231 | 18 | 14 | 15 132B5 | - | KC60.9.024 |
| S4 | 47-57 | 30 | 115 | 135 | 165 | 170 | 216 | 25 | 14 | 5 100/112B5<br>30 132B5 | - | KC50.9.022 |
| H3 | 023-233 | 30 | 130 | 135 | 135 | 185 | 231 | 25 | 14 | 15 132B5 | - | KC50.9.025 |
| M2 | 52/3 | 30 | 110 | 135÷150 | 100 | 190 | 211 | 18 | 11 | 10 100/112B5<br>35 132B5 | - | KC50.9.023 |

Other feet are available, see our web site
Sono disponibili altri piedini, consulta il nostro sito web

**A see on page bottom**

Most popular types
Tipi più diffusi

P512A-**F**... Output flanges
flange di uscita

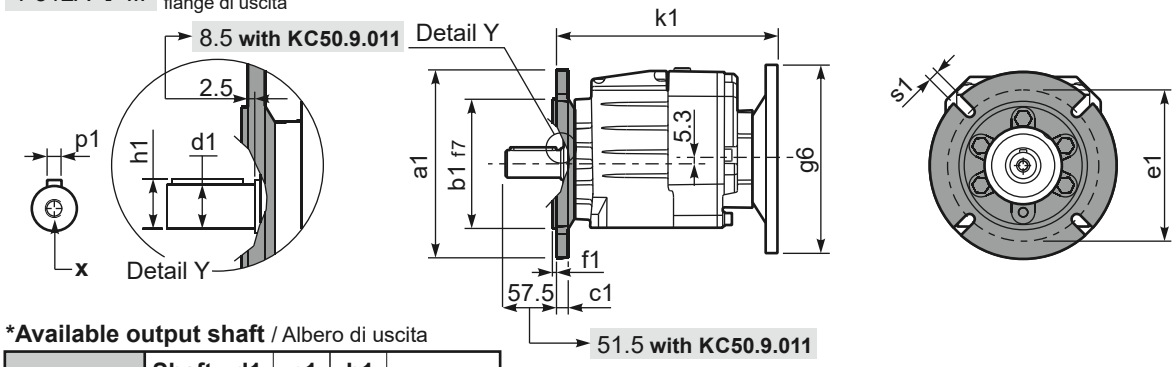


***Available output shaft** / Albero di uscita

| | Shaft - d1 | p1 | h1 | x |
|---|---|---|---|---|
| Standard | ø 30x60 | 8 | 33 | M10x22 |
| On request<br>A richiesta | ø 24x50 | 8 | 27 | M8x19 |
| | ø 25x50 | 8 | 28 | M8x19 |
| | ø 28x60 | 8 | 31 | M8x19 |
| | ø 35x60 | 10 | 38 | M10x22 |

**Available output flanges** / flange di uscita

| a1 ø | b1 | c1 | e1 | f1 | s1 | kit code |
|---|---|---|---|---|---|---|
| 160 | 110 | 14 | 130 | 3.5 | 11 | KC50.9.011 |
| 200 | 130 | 13 | 165 | 3.5 | 11 | KC50.9.012 |
| 250 | 180 | 15.5 | 215 | 4 | 14 | KC50.9.013 |

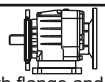

With flange and feet only on request. Ask for compatibility

P512A-**N**... Basic gearbox
Riduttore base

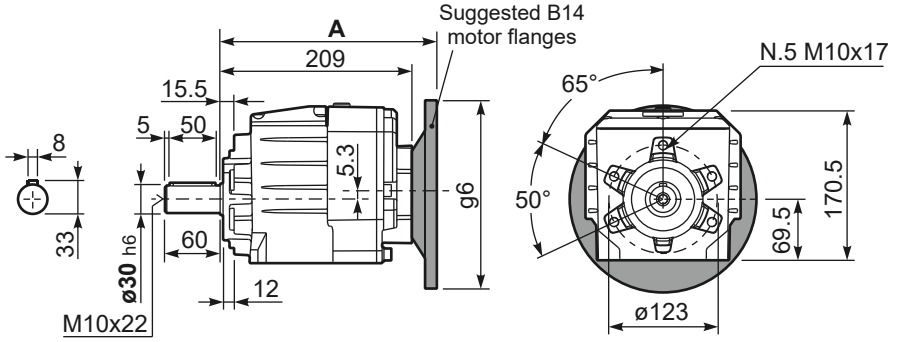


**R**512A-**N**... Input Shaft
Albero in entrata

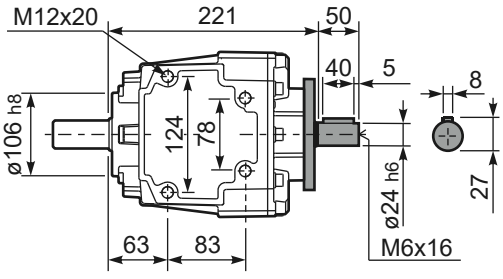


| B5 Motor Flanges | A | $C_{max}$ | g6 | k1 | kit code | k1 with KC50.9.011 |
|---|---|---|---|---|---|---|
| 71 B5 | 227.5 | 215.3 | 160 | 230 | K023.4.041 | 236 |
| 80/90 B5 | 229.5 | 235.3 | 200 | 232 | K023.4.042 | 238 |
| 100/112 B5 | 238.5 | 260.3 | 250 | 241 | K023.4.043 | 247 |
| 132 B5 | 259.5 | 285.3 | 300 | 259 | KC51.4.043 | 265 |

| B14 Motor Flanges | A | $C_{max}$ | g6 | k1 | kit code | k1 with KC50.9.011 |
|---|---|---|---|---|---|---|
| 80 B14 | 229.5 | 195.3 | 120 | 232 | K085.4.046 | 238 |
| 90 B14 | 229.5 | 205.3 | 140 | 232 | K085.4.045 | 238 |
| 100/112 B14 | 238.5 | 215.3 | 160 | 241 | K085.4.047 | 247 |
| 132 B14 | 259.5 | 235.3 | 200 | 259 | KC51.4.041 | 265 |