Ficha Técnica
Reductor de velocidad
REDUCTOR EN LINEA

MODELO	513A	
Ø EJE DE SALIDA	30	mm
RELACIÓN APROXIMADA	218	
RELACIÓN EXACTA	218.26	
VELOCIDAD DE SALIDA	7	RPM
VELOCIDAD DE SALIDA EXACTA	7	RPM
POTENCIA DE ENTRADA	0.18	KW
ROTACIÓN DE ENTRADA	1400	RPM
PAM DE ENTRADA	63B5	
PAR DE SALIDA	251.89	N.m
PAR NOMINAL	326.00	N.m
POTENCIA NOMINAL	0.23	KW
FACTOR DE SERVICIO	1.28	
EFICIENCIA DINÁMICA	0.94	

Cantidad de Aceite (L)

B3/H1	B6/H4	B7/H3	B8/H2	V5/H5	V6/H6
1	0.9	1.120	1.15	1.45	1.4

Cargas Radiales y Axiales

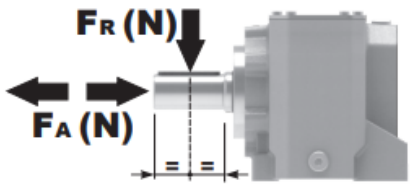

n_2 [min-1]	FA [N]	FR [N]
300	460	2300
200	520	2600
120	620	3100
15	1000	5000

Universal Motors S.A.
Rua Comendador Brandão, 484
4495-375 Póvoa de Varzim
geral@universalmotors.pt
TEL.: 252 299 080

Universal Motors UK, Ltd
Unit E2, Meltham Mills Road
West Yorkshire HD9 4AR
enquiries@universalmotors-group.co.uk
TEL.: +44(0) 1484660222

Universal Motors SL
C/La Habana n.6 nave 4 Pl Camporroso
28806 Alcala de Henares
info@universalmotors-group.es
TEL.: 918 864 213

P513A**B1**... With feet
Con piedini

Gearbox weight / peso riduttore: With flange **11.9 kg**, With feet **12.1 Kg**

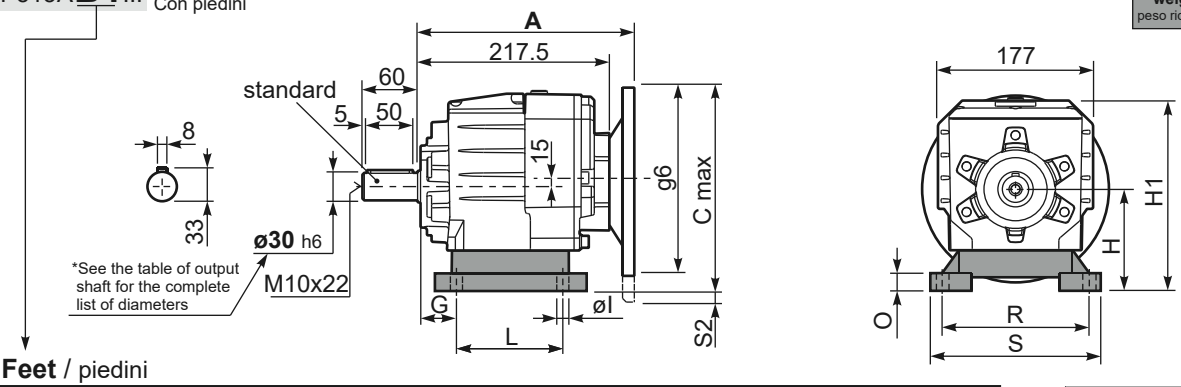

Feet / piedini

Feet Code	Market reference	G	H	R	L	S	H1	O	øl	S2 only with motor flange	B5 max. Flange	kit code
B3	312/3	18	110	160	130	190	211	20	11	-	-	KC50.9.024
B4	30/35	20	130	180	149.5	216	231	18	14	-	-	KC60.9.024
S4	47-57	30	115	135	165	170	216	25	14	-	-	KC50.9.022
H3	023-233	30	130	135	135	185	231	25	14	-	-	KC50.9.025
M2	52/3	30	110	135÷150	100	190	211	18	11	-	-	KC50.9.023

Other feet are available, see our web site
Sono disponibili altri piedini, consulta il nostro sito web

A see on page bottom

Most popular types
Tipi più diffusi

P513A**-F**... Output flanges
flange di uscita

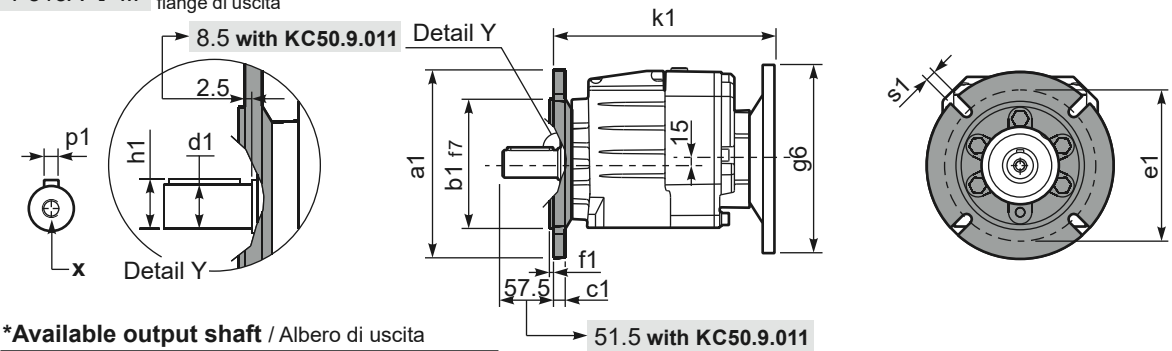

***Available output shaft** / Albero di uscita

	Shaft - d1	p1	h1	x
Standard	ø 30x60	8	33	M10x22
On request A richiesta	ø 24x50	8	27	M8x19
	ø 25x50	8	28	M8x19
	ø 28x60	8	31	M8x19
	ø 35x60	10	38	M10x22

Available output flanges / flange di uscita

a1 ø	b1	c1	e1	f1	s1	kit code
160	110	14	130	3.5	11	KC50.9.011
200	130	13	165	3.5	11	KC50.9.012
250	180	15.5	215	4	14	KC50.9.013

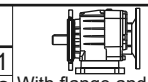

With flange and feet only on request. Ask for compatibility

P513A**-N**... Basic gearbox
Riduttore base

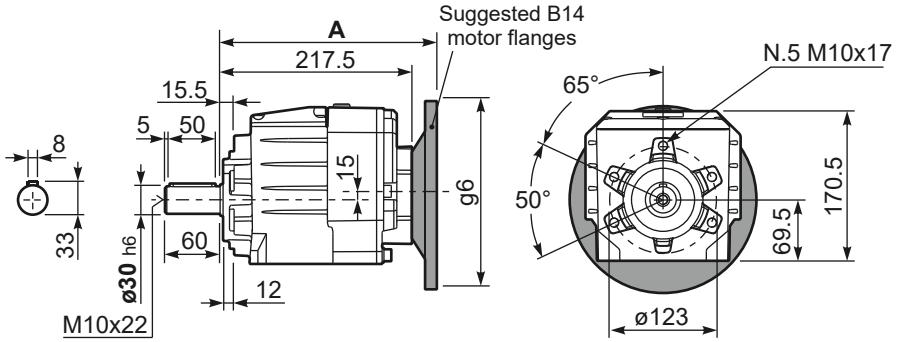

R513A**-N**... Input Shaft
Albero in entrata

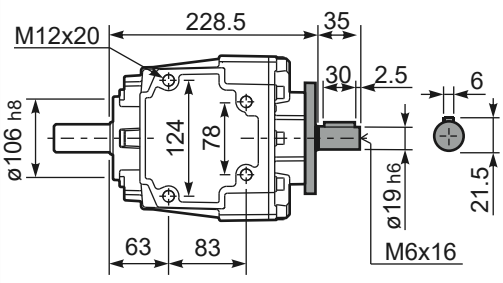

B5 Motor Flanges	A	C_{max}	g6	k1	kit code	k1 with KC50.9.011
63 B5	238	215	140	240.5	K063.4.041	246.5
71 B5	236	225	160	238.5	K063.4.042	244.5
80/90 B5	238	245	200	240.5	K063.4.043	246.5

B14 Motor Flanges	A	C_{max}	g6	k1	kit code	k1 with KC50.9.011
71 B14	236	197.5	105	238.5	K063.4.047	244.5
80 B14	238	205	120	240.5	K063.4.046	246.5
90 B14	238	215	140	240.5	K063.4.041	246.5