Ficha Técnica
Reductor de velocidad
# REDUCTOR EN LINEA

| | | |
|---|---|---|
| MODELO | 612A | |
| Ø EJE DE SALIDA | 35 | mm |
| RELACIÓN APROXIMADA | 11 | |
| RELACIÓN EXACTA | 11.43 | |
| VELOCIDAD DE SALIDA | 133 | RPM |
| VELOCIDAD DE SALIDA EXACTA | 128 | RPM |
| POTENCIA DE ENTRADA | 4.00 | KW |
| ROTACIÓN DE ENTRADA | 1400 | RPM |
| PAM DE ENTRADA | 112B14 | |
| PAR DE SALIDA | 299.38 | N.m |
| PAR NOMINAL | 415.00 | N.m |
| POTENCIA NOMINAL | 5.5 | KW |
| FACTOR DE SERVICIO | 1.38 | |
| EFICIENCIA DINÁMICA | 0.96 | |

## Cantidad de Aceite (L)

| B3/H1 | B6/H4 | B7/H3 | B8/H2 | V5/H5 | V6/H6 |
|---|---|---|---|---|---|
| 0.8 | 1 | 1.2 | 1.2 | 1.3 | 1.35 |

## Cargas Radiales y Axiales

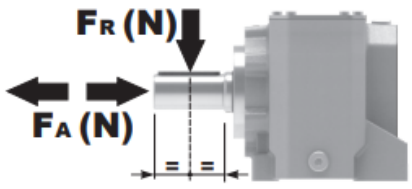


| $n_2$ [min-1] | FA [N] | FR [N] |
|---|---|---|
| 300 | 560 | 2800 |
| 200 | 640 | 3200 |
| 120 | 760 | 3800 |
| 15 | 1300 | 6500 |

Universal Motors S.A.
Rua Comendador Brandão, 484
4495-375 Póvoa de Varzim
geral@universalmotors.pt
TEL.: 252 299 080

Universal Motors UK, Ltd
Unit E2, Meltham Mills Road
West Yorkshire HD9 4AR
enquiries@universalmotors-group.co.uk
TEL.: +44(0) 1484660222

Universal Motors SL
C/La Habana n.6 nave 4 Pl Camporroso
28806 Alcala de Henares
info@universalmotors-group.es
TEL.: 918 864 213

P612A**B1**... With feet
Con piedini

| Gearbox weight peso riduttore | With flange **14.1 kg** |
|---|---|
| | With feet **14.5 kg** |

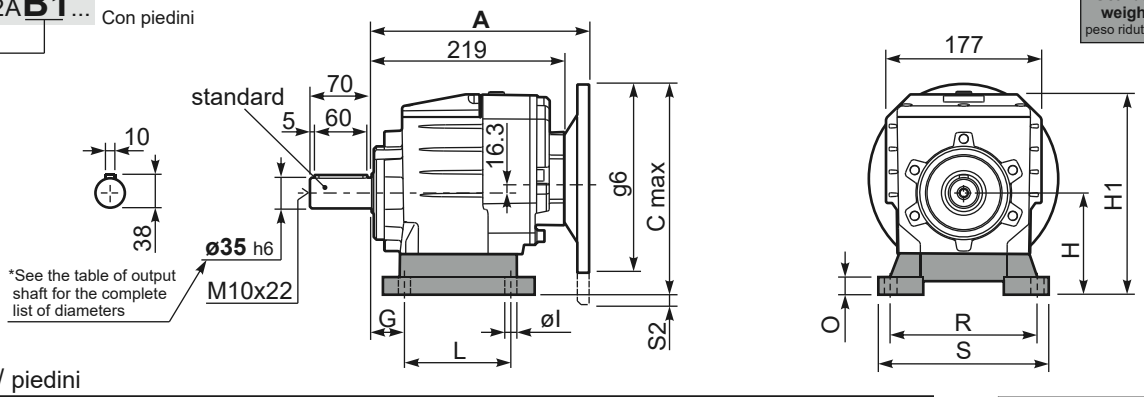


**Feet** / piedini

| Feet Code | Market reference | G | H | R | L | S | H1 | O | øl | S2 only with motor flange | B5 max. Flange | kit code |
|---|---|---|---|---|---|---|---|---|---|---|---|---|
| **B4** | 412/3 | 20 | 130 | 180 | 149.5 | 216 | 242 | 18 | 14 | - | - | KC60.9.024 |
| **S4** | 47-57 | 30 | 115 | 135 | 165 | 170 | 227 | 25 | 14 | 13 132B5 | - | KC50.9.022 |
| **M3** | 62/3 | 35 | 120 | 170÷185 | 110 | 230 | 232 | 20 | 14 | 8 132B5 | - | KC60.9.023 |
| **S7** | 77 | 35 | 140 | 170 | 205 | 204 | 252 | 8 | 14 | - | - | KC60.9.029LM |
| **H4** | 024-243 | 35 | 155 | 170 | 150 | 225 | 267 | 30 | 14 | - | - | KC60.9.025 |

Other feet are available, see our web site
Sono disponibili altri piedini, consulta il nostro sito web

**A see on page bottom**

Most popular types
Tipi più diffusi

P612A**-F**... Output flanges
flange di uscita

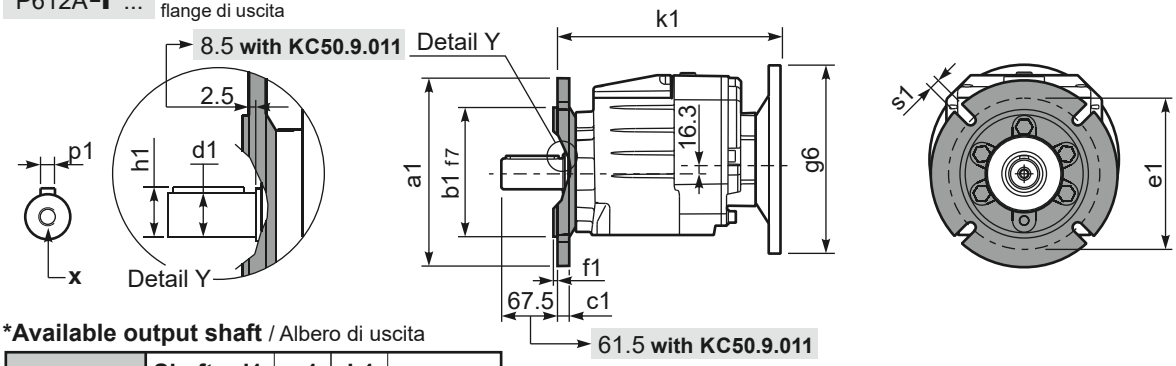


***Available output shaft** / Albero di uscita

| | Shaft - d1 | p1 | h1 | x |
|---|---|---|---|---|
| Standard | ø 35x70 | 10 | 38 | M10x22 |
| On request A richiesta | ø 28x60 | 8 | 31 | M8x20 |
| | ø 30x60 | 8 | 33 | M10x22 |
| | ø 38x70 | 10 | 41 | M10x25 |
| | ø 40x80 | 12 | 43 | M12x28 |

**Available output flanges** / flange di uscita

| a1 ø | b1 | c1 | e1 | f1 | s1 | kit code |
|---|---|---|---|---|---|---|
| 160 | 110 | 14 | 130 | 3.5 | 11 | KC50.9.011 |
| 200 | 130 | 13 | 164 | 3.5 | 11 | KC50.9.012 |
| 250 | 180 | 15.5 | 215 | 4 | 14 | KC50.9.013 |

With flange and feet only on request. Ask for compatibility

P612A**-N**... Basic gearbox
Riduttore base

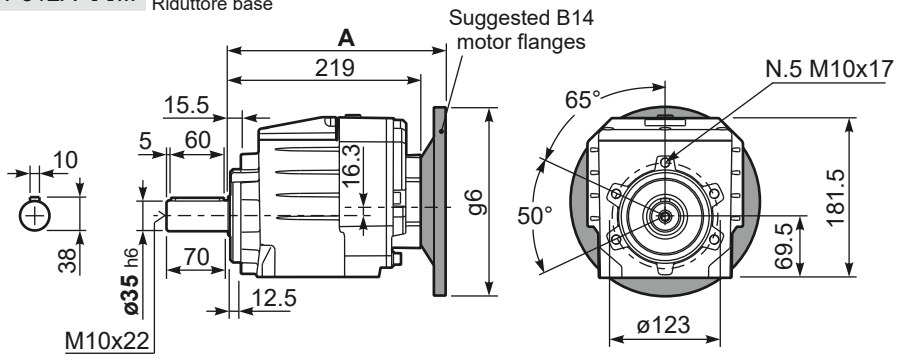


**R**612A**-N**... Input Shaft
Albero in entrata

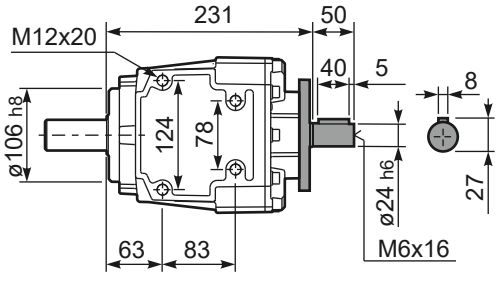


| B5 Motor Flanges | A | $C_{max}$ | g6 | k1 | kit code | k1 with KC50.9.011 |
|---|---|---|---|---|---|---|
| 71 B5 | 237.5 | 251.3 | 160 | 240 | K023.4.041 | 246 |
| 80/90 B5 | 239.5 | 271.3 | 200 | 242 | K023.4.042 | 248 |
| 100/112 B5 | 248.5 | 296.3 | 250 | 251 | K023.4.043 | 257 |
| 132 B5 | 269.5 | 321.3 | 300 | 269 | KC51.4.043 | 275 |

| B14 Motor Flanges | A | $C_{max}$ | g6 | k1 | kit code | k1 with KC50.9.011 |
|---|---|---|---|---|---|---|
| 80 B14 | 239.5 | 231.3 | 120 | 242 | K085.4.046 | 248 |
| 90 B14 | 239.5 | 241.3 | 140 | 242 | K085.4.045 | 248 |
| 100/112 B14 | 248.5 | 251.3 | 160 | 251 | K085.4.047 | 257 |
| 132 B14 | 269.5 | 271.3 | 200 | 269 | KC51.4.041 | 275 |