Ficha Técnica
Reductor de velocidad
REDUCTOR EN LINEA

MODELO	612A	
Ø EJE DE SALIDA	35	mm
RELACIÓN APROXIMADA	30	
RELACIÓN EXACTA	29.41	
VELOCIDAD DE SALIDA	49	RPM
VELOCIDAD DE SALIDA EXACTA	50	RPM
POTENCIA DE ENTRADA	2.20	KW
ROTACIÓN DE ENTRADA	1400	RPM
PAM DE ENTRADA	100B5	
PAR DE SALIDA	423.67	N.m
PAR NOMINAL	450.00	N.m
POTENCIA NOMINAL	2.3	KW
FACTOR DE SERVICIO	1.05	
EFICIENCIA DINÁMICA	0.96	

Cantidad de Aceite (L)

B3/H1	B6/H4	B7/H3	B8/H2	V5/H5	V6/H6
0.8	1	1.2	1.2	1.3	1.35

Cargas Radiales y Axiales

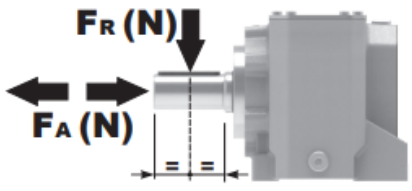

n_2 [min-1]	FA [N]	FR [N]
300	560	2800
200	640	3200
120	760	3800
15	1300	6500

Universal Motors S.A.
Rua Comendador Brandão, 484
4495-375 Póvoa de Varzim
geral@universalmotors.pt
TEL.: 252 299 080

Universal Motors UK, Ltd
Unit E2, Meltham Mills Road
West Yorkshire HD9 4AR
enquiries@universalmotors-group.co.uk
TEL.: +44(0) 1484660222

Universal Motors SL
C/La Habana n.6 nave 4 Pl Camporroso
28806 Alcala de Henares
info@universalmotors-group.es
TEL.: 918 864 213

P612A**B1**... With feet
Con piedini

Gearbox weight peso riduttore	With flange **14.1 kg**
	With feet **14.5 kg**

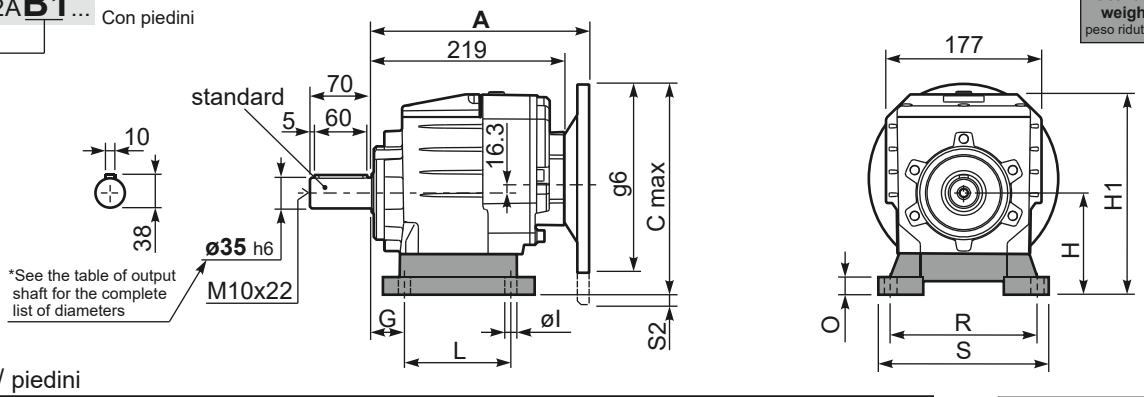

Feet / piedini

Feet Code	Market reference	G	H	R	L	S	H1	O	øl	S2 only with motor flange	B5 max. Flange	kit code
B4	412/3	20	130	180	149.5	216	242	18	14	-	-	KC60.9.024
S4	47-57	30	115	135	165	170	227	25	14	13 132B5	-	KC50.9.022
M3	62/3	35	120	170÷185	110	230	232	20	14	8 132B5	-	KC60.9.023
S7	77	35	140	170	205	204	252	8	14	-	-	KC60.9.029LM
H4	024-243	35	155	170	150	225	267	30	14	-	-	KC60.9.025

Other feet are available, see our web site
Sono disponibili altri piedini, consulta il nostro sito web

A see on page bottom

Most popular types
Tipi più diffusi

P612A**-F**... Output flanges
flange di uscita

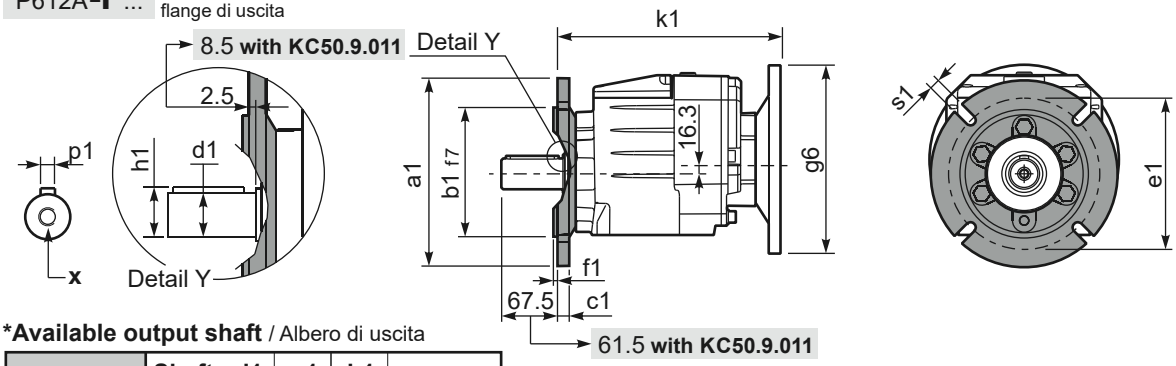

***Available output shaft** / Albero di uscita

	Shaft - d1	p1	h1	x
Standard	ø 35x70	10	38	M10x22
On request A richiesta	ø 28x60	8	31	M8x20
	ø 30x60	8	33	M10x22
	ø 38x70	10	41	M10x25
	ø 40x80	12	43	M12x28

Available output flanges / flange di uscita

a1 ø	b1	c1	e1	f1	s1	kit code
160	110	14	130	3.5	11	KC50.9.011
200	130	13	164	3.5	11	KC50.9.012
250	180	15.5	215	4	14	KC50.9.013

With flange and feet only on request. Ask for compatibility

P612A**-N**... Basic gearbox
Riduttore base

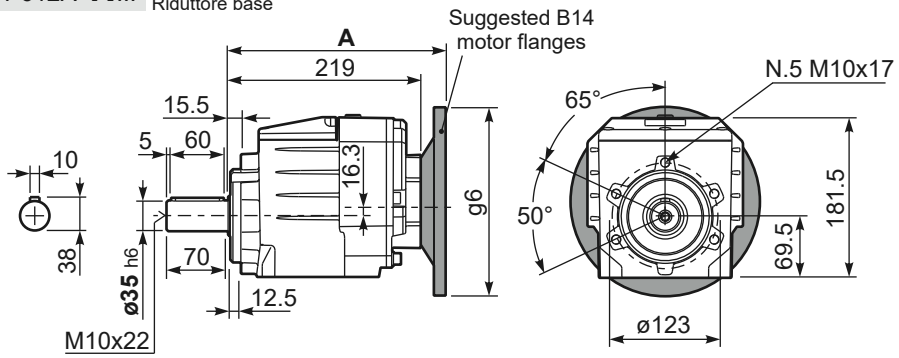

R612A**-N**... Input Shaft
Albero in entrata

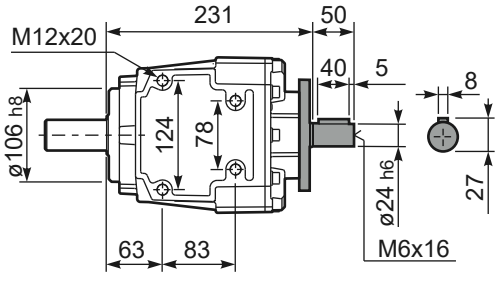

B5 Motor Flanges	A	C_{max}	g6	k1	kit code	k1 with KC50.9.011
71 B5	237.5	251.3	160	240	K023.4.041	246
80/90 B5	239.5	271.3	200	242	K023.4.042	248
100/112 B5	248.5	296.3	250	251	K023.4.043	257
132 B5	269.5	321.3	300	269	KC51.4.043	275

B14 Motor Flanges	A	C_{max}	g6	k1	kit code	k1 with KC50.9.011
80 B14	239.5	231.3	120	242	K085.4.046	248
90 B14	239.5	241.3	140	242	K085.4.045	248
100/112 B14	248.5	251.3	160	251	K085.4.047	257
132 B14	269.5	271.3	200	269	KC51.4.041	275