Ficha Técnica
Reductor de velocidad
SIN-FIN CORONA CUADRADO

| | | |
|---|---|---|
| MODELO | M45 | |
| Ø EJE DE SALIDA | 18 | mm |
| RELACIÓN APROXIMADA | 40 | |
| RELACIÓN EXACTA | 37.00 | |
| VELOCIDAD DE SALIDA | 37 | RPM |
| VELOCIDAD DE SALIDA EXACTA | 39 | RPM |
| POTENCIA DE ENTRADA | 0.25 | KW |
| ROTACIÓN DE ENTRADA | 1400 | RPM |
| PAM DE ENTRADA | 71B14 | |
| PAR DE SALIDA | 39.75 | N.m |
| PAR NOMINAL | 41.00 | N.m |
| POTENCIA NOMINAL | 0.26 | KW |
| FACTOR DE SERVICIO | 1.04 | |
| EFICIENCIA DINÁMICA | 0.63 | |

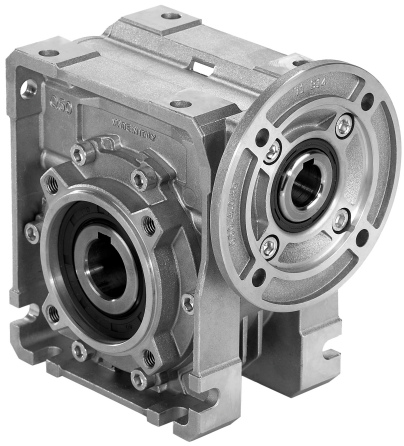

## Cantidad de Aceite (L)

| B3/H1 | B6/H4 | B7/H3 | B8/H2 | V5/H5 | V6/H6 |
|---|---|---|---|---|---|
| 0.09 | 0.09 | 0.09 | 0.09 | 0.09 | 0.09 |

## Cargas Radiales y Axiales

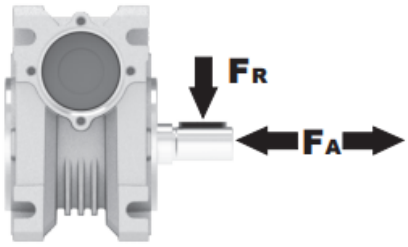


| $n_2$ [min-1] | FA [N] | FR [N] |
|---|---|---|
| 200 | 180 | 900 |
| 100 | 220 | 1100 |
| 50 | 260 | 1400 |
| 15 | 400 | 2000 |

Universal Motors S.A.
Rua Comendador Brandão, 484
4495-375 Póvoa de Varzim
geral@universalmotors.pt
TEL.: 252 299 080

Universal Motors UK, Ltd
Unit E2, Meltham Mills Road
West Yorkshire HD9 4AR
enquiries@universalmotors-group.co.uk
TEL.: +44(0) 1484660222

Universal Motors SL
C/La Habana n.6 nave 4 Pl Camporroso
28806 Alcala de Henares
info@universalmotors-group.es
TEL.: 918 864 213

## PM45**FB**... Basic wormbox
Riduttore base

| M. flanges | Kit code | øF | A |
|---|---|---|---|
| **63B5** | K050.4.041 | 138 | 80 |
| **71B5** | K050.4.042 | 160 | 77.5 |
| | | | |
| **56B14** | KC40.4.049 | 80 | 77.5 |
| **63B14** | K050.4.047 | 90 | 80 |
| **71B14** | K050.4.045 | 105 | 77.5 |

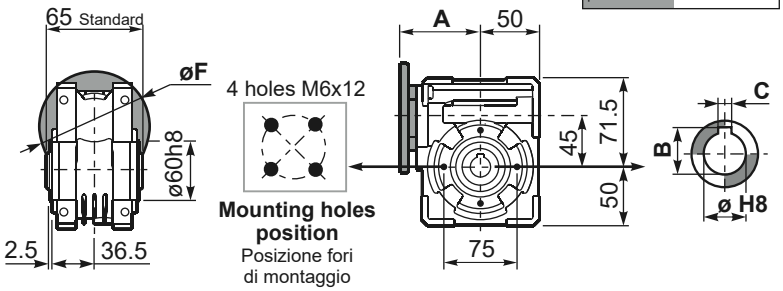


**Gearbox weight** peso riduttore **2.30 kg**

| ø H8 | B | C | *Spacer code |
|---|---|---|---|
| 18 Standard | 20.8 | 6 | KM45.3.018 |
| 19 on request | 21.8 | 6 | KM45.3.019 |
| 20 on request | 22.8 | 6 | KM45.3.020 |

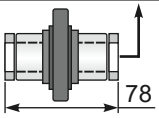


***On Request**
output shaft with spacers

## PM45**FC**... Square flange
Flangia quadrata

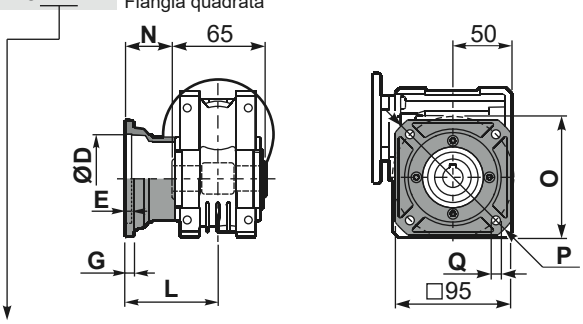


| type **B** | øD | E | G | L | N | O | P | Q | kit code |
|---|---|---|---|---|---|---|---|---|---|
| **FC** | 60 H8 | 4 | 7 | 67 | 34.5 | 75 | 110 | 9 | KM45.9.010 |
| **FL** | 60 H8 | 4 | 7 | 97 | 64.5 | 75 | 110 | 9 | KM45.9.011 |

## PM45**F1**... Round flange
Flangia rotonda

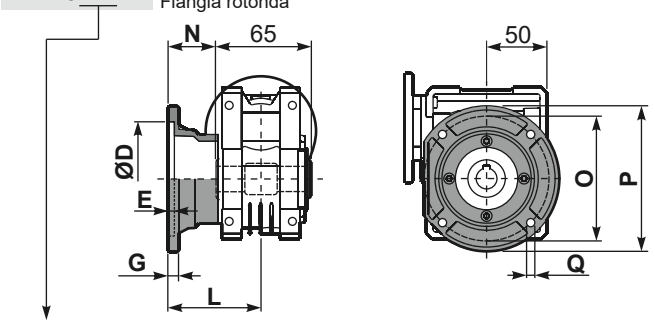


| type **S** | øD | E | G | L | N | O | P | Q | kit code |
|---|---|---|---|---|---|---|---|---|---|
| **F1** | 95H8 | 5 | 9 | 80 | 47.5 | 115 | 140 | 9.5 | KM45.9.012 |
| **F2** | - | - | - | - | - | - | - | - | - |

## PM45**FB**... Feet
Piedini

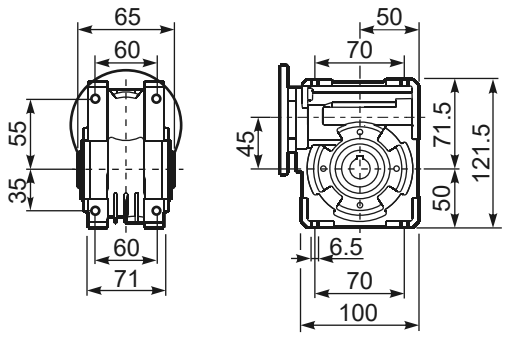


## PM45**BR**... Reaction arm
Braccio di reazione

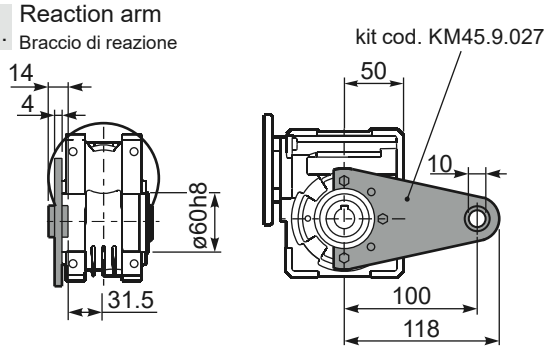


## **R**M45FB... Input shaft
Albero in entrata

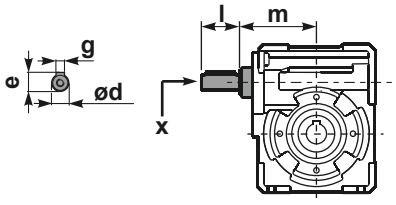


| | ød | e | g | l | m | x | kit code |
|---|---|---|---|---|---|---|---|
| type **B** | 11 h6 | 12.5 | 4 | 30 | 74 | - | ❶ K045.5.006 PAM71<br>❷ - |
| type **S** | - | - | - | - | - | - | ❶ -<br>❷ - |

## PM45.....**S**... Single Shaft
Albero lento semplice

## PM45.....**D**... Double Shaft
Albero lento bisp.

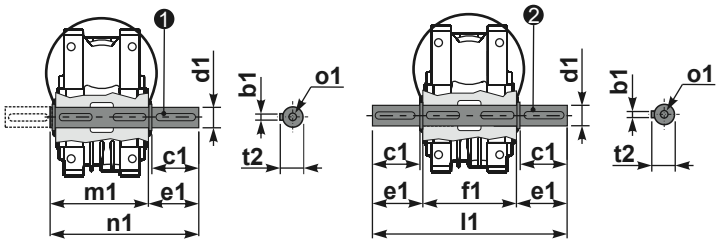


❶ kit cod. K045.5.028 type **B**
kit cod. KS045.5.030 type **S**

❷ kit cod. K045.5.029 type **B**

| | b1 | c1 | d1 | e1 | f1 | l1 | m1 | n1 | t2 | o1 |
|---|---|---|---|---|---|---|---|---|---|---|
| type **B** | 6 | 32 | 18 $^{-0.005}_{-0.020}$ | 43 | 65 | 151 | 70 | 113 | 20.5 | M6x18 |
| type **S** | 6 | 40 | 19 $^{-0.005}_{-0.020}$ | 58.5 | - | - | 70 | 128.5 | 21.5 | M8x20 |