Ficha Técnica
Reductor de velocidad
SIN-FIN CORONA CUADRADO

MODELO	M45	
Ø EJE DE SALIDA	18	mm
RELACIÓN APROXIMADA	7	
RELACIÓN EXACTA	7.00	
VELOCIDAD DE SALIDA	209	RPM
VELOCIDAD DE SALIDA EXACTA	209	RPM
POTENCIA DE ENTRADA	0.25	KW
ROTACIÓN DE ENTRADA	1400	RPM
PAM DE ENTRADA	71B5	
PAR DE SALIDA	9.55	N.m
PAR NOMINAL	30.00	N.m
POTENCIA NOMINAL	0.8	KW
FACTOR DE SERVICIO	3.20	
EFICIENCIA DINÁMICA	0.80	

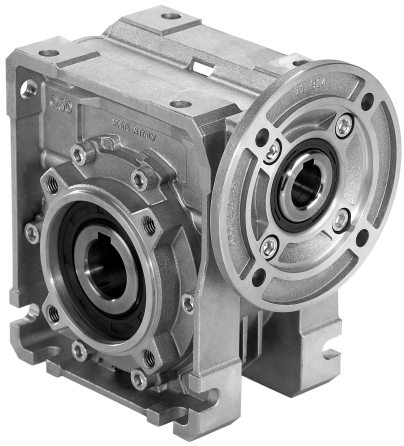

Cantidad de Aceite (L)

B3/H1	B6/H4	B7/H3	B8/H2	V5/H5	V6/H6
0.09	0.09	0.09	0.09	0.09	0.09

Cargas Radiales y Axiales

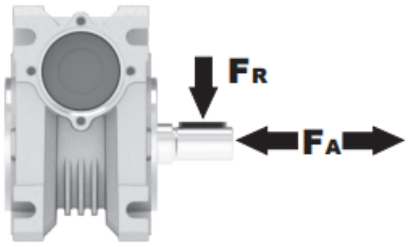

n_2 [min-1]	FA [N]	FR [N]
200	180	900
100	220	1100
50	260	1400
15	400	2000

Universal Motors S.A.
Rua Comendador Brandão, 484
4495-375 Póvoa de Varzim
geral@universalmotors.pt
TEL.: 252 299 080

Universal Motors UK, Ltd
Unit E2, Meltham Mills Road
West Yorkshire HD9 4AR
enquiries@universalmotors-group.co.uk
TEL.: +44(0) 1484660222

Universal Motors SL
C/La Habana n.6 nave 4 Pl Camporroso
28806 Alcala de Henares
info@universalmotors-group.es
TEL.: 918 864 213

PM45**FB**... Basic wormbox
Riduttore base

M. flanges	Kit code	øF	A
63B5	K050.4.041	138	80
71B5	K050.4.042	160	77.5
56B14	KC40.4.049	80	77.5
63B14	K050.4.047	90	80
71B14	K050.4.045	105	77.5

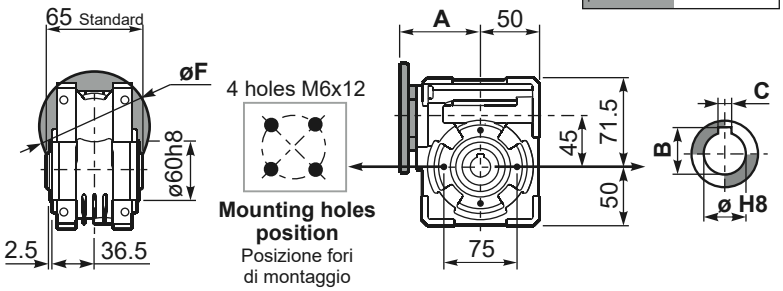

Gearbox weight peso riduttore **2.30 kg**

ø H8	B	C	*Spacer code
18 Standard	20.8	6	KM45.3.018
19 on request	21.8	6	KM45.3.019
20 on request	22.8	6	KM45.3.020

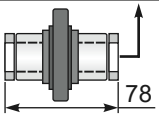

***On Request**
output shaft with spacers

PM45**FC**... Square flange
Flangia quadrata

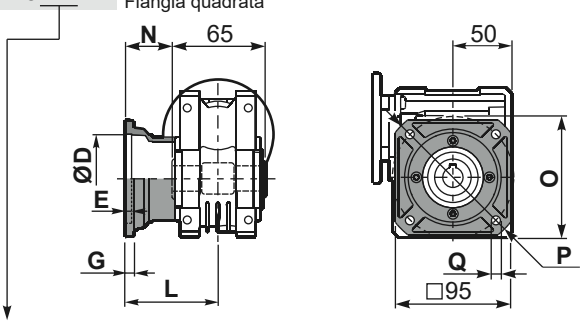

type **B**	øD	E	G	L	N	O	P	Q	kit code
FC	60 H8	4	7	67	34.5	75	110	9	KM45.9.010
FL	60 H8	4	7	97	64.5	75	110	9	KM45.9.011

PM45**F1**... Round flange
Flangia rotonda

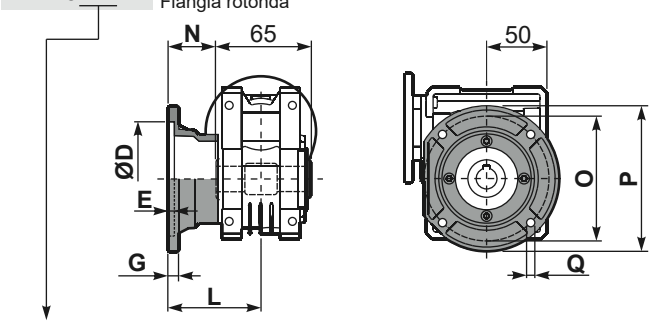

type **S**	øD	E	G	L	N	O	P	Q	kit code
F1	95H8	5	9	80	47.5	115	140	9.5	KM45.9.012
F2	-	-	-	-	-	-	-	-	-

PM45**FB**... Feet
Piedini

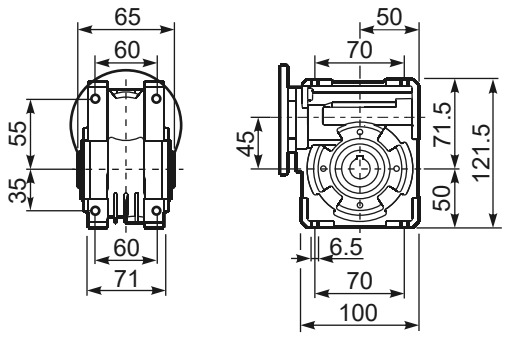

PM45**BR**... Reaction arm
Braccio di reazione

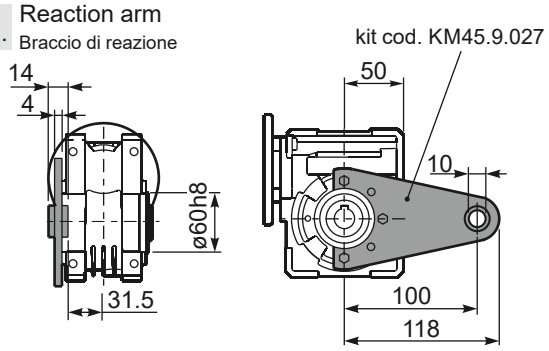

RM45FB... Input shaft
Albero in entrata

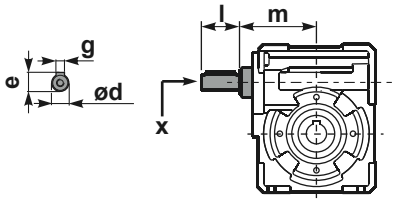

	ød	e	g	l	m	x	kit code
type **B**	11 h6	12.5	4	30	74	-	❶ K045.5.006 PAM71 ❷ -
type **S**	-	-	-	-	-	-	❶ - ❷ -

PM45.....**S**... Single Shaft
Albero lento semplice

PM45.....**D**... Double Shaft
Albero lento bisp.

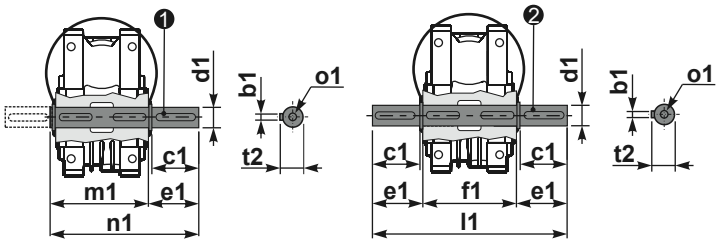

❶ kit cod. K045.5.028 type **B**
kit cod. KS045.5.030 type **S**

❷ kit cod. K045.5.029 type **B**

	b1	c1	d1	e1	f1	l1	m1	n1	t2	o1
type **B**	6	32	18 $^{-0.005}_{-0.020}$	43	65	151	70	113	20.5	M6x18
type **S**	6	40	19 $^{-0.005}_{-0.020}$	58.5	-	-	70	128.5	21.5	M8x20