Ficha Técnica
Reductor de velocidad
SIN-FIN CORONA CUADRADO

| | | |
|---|---|---|
| MODELO | Q63 | |
| Ø EJE DE SALIDA | 25 | mm |
| RELACIÓN APROXIMADA | 30 | |
| RELACIÓN EXACTA | 30.00 | |
| VELOCIDAD DE SALIDA | 49 | RPM |
| VELOCIDAD DE SALIDA EXACTA | 49 | RPM |
| POTENCIA DE ENTRADA | 1.10 | KW |
| ROTACIÓN DE ENTRADA | 1400 | RPM |
| PAM DE ENTRADA | 90B14 | |
| PAR DE SALIDA | 166.57 | N.m |
| PAR NOMINAL | 146.00 | N.m |
| POTENCIA NOMINAL | 0.96 | KW |
| FACTOR DE SERVICIO | 0.87 | |
| EFICIENCIA DINÁMICA | 0.74 | |

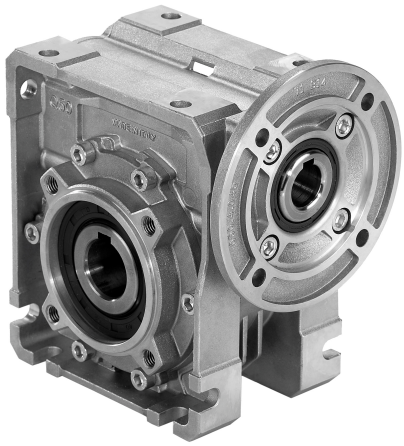

## Cantidad de Aceite (L)

| B3/H1 | B6/H4 | B7/H3 | B8/H2 | V5/H5 | V6/H6 |
|---|---|---|---|---|---|
| 0.3 | 0.3 | 0.3 | 0.3 | 0.3 | 0.3 |

## Cargas Radiales y Axiales

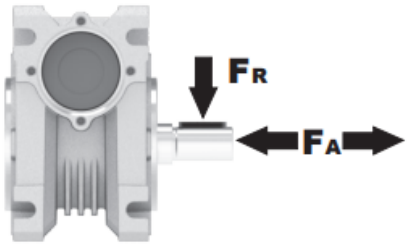


| $n_2$ [min-1] | FA [N] | FR [N] |
|---|---|---|
| 200 | 360 | 1800 |
| 100 | 460 | 2300 |
| 50 | 600 | 3000 |
| 15 | 800 | 4000 |

Universal Motors S.A.
Rua Comendador Brandão, 484
4495-375 Póvoa de Varzim
geral@universalmotors.pt
TEL.: 252 299 080

Universal Motors UK, Ltd
Unit E2, Meltham Mills Road
West Yorkshire HD9 4AR
enquiries@universalmotors-group.co.uk
TEL.: +44(0) 1484660222

Universal Motors SL
C/La Habana n.6 nave 4 Pl Camporroso
28806 Alcala de Henares
info@universalmotors-group.es
TEL.: 918 864 213

## PQ63**FB**... Basic wormbox
Riduttore base

**Gearbox weight** peso riduttore: **6.00 kg**

| M. flanges | Kit code | øF | A |
|---|---|---|---|
| **63B5** | K063.4.041 | 140 | 99.5 |
| **71B5** | K063.4.042 | 160 | 97.5 |
| **80/90B5** | K063.4.043 | 200 | 99.5 |
| | | | |
| **71B14** | K063.4.047 | 105 | 97.5 |
| **80B14** | K063.4.046 | 120 | 99.5 |
| **90B14** | K063.4.041 | 140 | 99.5 |

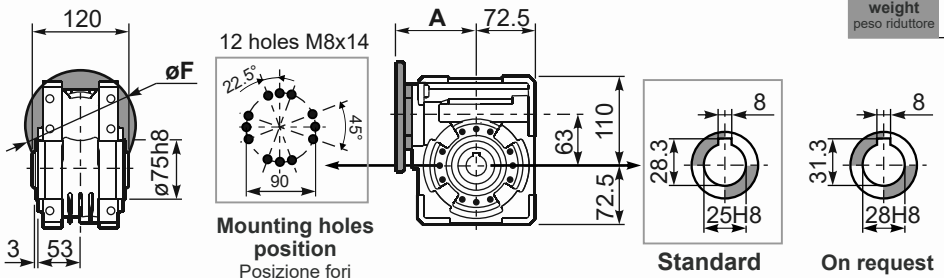


**Mounting holes position**
Posizione fori di montaggio

**Standard**
Hollow shaft

**On request**
A richiesta

## PQ63**FC**... Square flange
Flangia quadrata

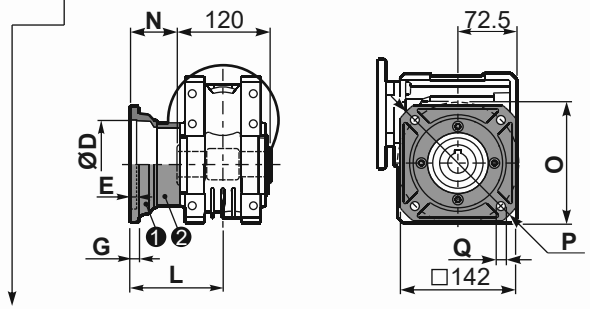


| type **B** | øD | E | G | L | N | O | P | Q | kit code |
|---|---|---|---|---|---|---|---|---|---|
| **FC** | 115 $^{+0.20}_{+0.15}$ | 6 | 12 | 86 | 26 | 150 | 180 | 11 | ❶ KQ63.9.010<br>❷ - |
| **FL** | 115 $^{+0.20}_{+0.15}$ | 6 | 12 | 116 | 56 | 150 | 180 | 11 | ❶ KQ63.9.010<br>❷ K063.0.200 |

## PQ63**F1**... Round flange
Flangia rotonda

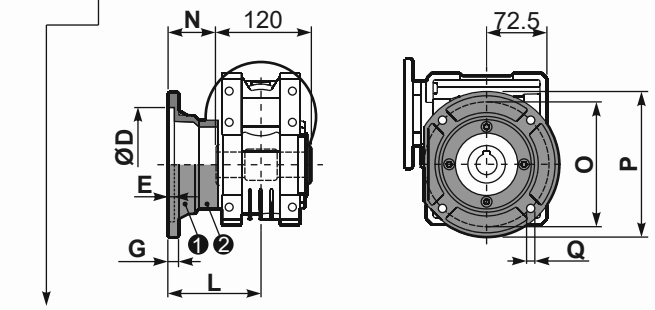


| type **S** | øD | E | G | L | N | O | P | Q | kit code |
|---|---|---|---|---|---|---|---|---|---|
| **F1** | 130 $^{+0.20}_{+0.15}$ | 7 | 13 | 110 | 50 | 165 | 200 | 13 | ❶ KS070.9.013<br>❷ - |
| **F2** | 115 $^{+0.20}_{+0.15}$ | 7 | 13 | 124 | 64 | 150 | 175 | 11 | ❶ KS063.9.013<br>❷ - |
| **F3** | 110 $^{+0.035}_{0}$ | 5 | 11 | 90 | 30 | 130 | 160 | 10 | ❶ KS063.9.011<br>❷ - |

## PQ63**FB**... Feet
Piedini

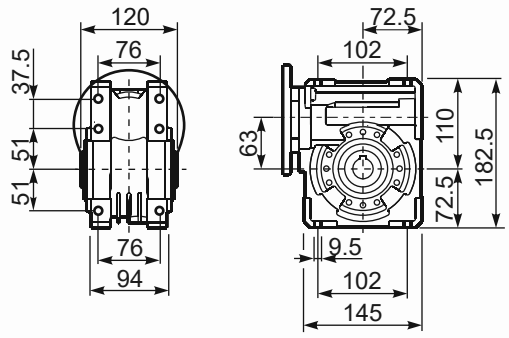


## PQ63**BR**... Reaction arm
Braccio di reazione

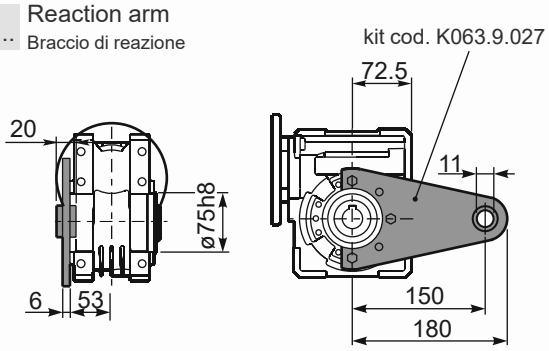


## **R**Q63FB... Input shaft
Albero in entrata

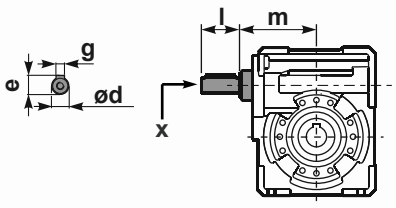


| | ød | e | g | l | m | x | kit code |
|---|---|---|---|---|---|---|---|
| type **B** | 18 h6 | 20.5 | 6 | 45 | 93 | M6x16 | ❶ K063.5.006 PAM80<br>❷ K063.5.007 PAM90 |
| type **S** | 19 h6 | 21.5 | 6 | 40 | 93 | M8x20 | ❶ KS063.5.008 PAM80<br>❷ KS063.5.009 PAM90 |

## PQ63.....**S**... Single Shaft
Albero lento semplice

## PQ63.....**D**... Double Shaft
Albero lento bisp.

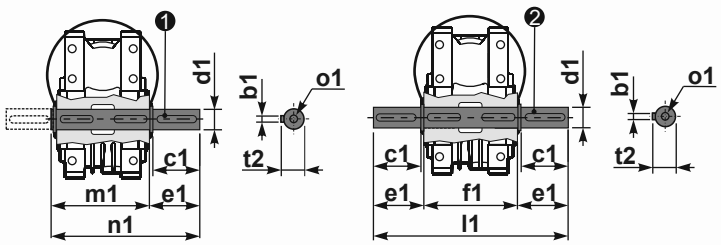


❶ kit cod. K063.5.028 type **B**

❷ kit cod. K063.5.029 type **B**

| | b1 | c1 | d1 | e1 | f1 | l1 | m1 | n1 | t2 | o1 |
|---|---|---|---|---|---|---|---|---|---|---|
| type **B** | 8 | 60 | 25 $^{-0.005}_{-0.020}$ | 63.2 | 120 | 246.4 | 126.8 | 190 | 28 | M8x20 |
| type **S** | - | - | - | - | - | - | - | - | - | - |