Ficha Técnica
Redutor de Velocidade
# PARAFUSO SEM FIM QUADRADO

| | | |
|---|---|---|
| MODELO | M50 | |
| Ø VEIO SAÍDA | 25 | mm |
| RÁCIO APROXIMADO | 50 | |
| RÁCIO EXATO | 50.00 | |
| VELOCIDADE SAÍDA | 29 | RPM |
| VELOCIDADE SAÍDA EXATA | 29 | RPM |
| POTÊNCIA ENTRADA | 0.25 | KW |
| ROTAÇÃO ENTRADA | 1400 | RPM |
| PAM ENTRADA | 71B5 | |
| TORQUE SAÍDA | 52.86 | N.m |
| TORQUE NOMINAL | 66.00 | N.m |
| POTÊNCIA NOMINAL | 0.31 | KW |
| FATOR SERVIÇO | 1.24 | |
| EFICIÊNCIA DINÂMICA | 0.62 | |

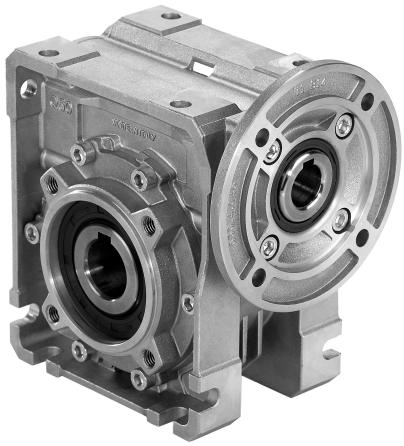

## QUANTIDADE DE ÓLEO (L)

| B3/H1 | B6/H4 | B7/H3 | B8/H2 | V5/H5 | V6/H6 |
|---|---|---|---|---|---|
| 0.14 | 0.14 | 0.14 | 0.14 | 0.14 | 0.14 |

## CARGAS RADIAIS E AXIAIS

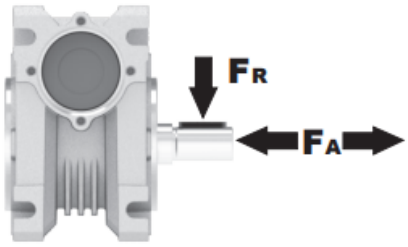


| $n_2$ [min-1] | FA [N] | FR [N] |
|---|---|---|
| 200 | 240 | 1200 |
| 100 | 300 | 1500 |
| 50 | 380 | 1900 |
| 15 | 560 | 2800 |

Universal Motors S.A.
Rua Comendador Brandão, 484
4495-375 Póvoa de Varzim
geral@universalmotors.pt
TEL.: 252 299 080

Universal Motors UK, Ltd
Unit E2, Meltham Mills Road
West Yorkshire HD9 4AR
enquiries@universalmotors-group.co.uk
TEL.: +44(0) 1484660222

Universal Motors SL
C/La Habana n.6 nave 4 Pl Camporroso
28806 Alcala de Henares
info@universalmotors-group.es
TEL.: 918 864 213

## PM50**FB**... Basic wormbox
Riduttore base

| M. flanges | Kit code | øF | A |
|---|---|---|---|
| **63B5** | K050.4.041 | 138 | 83.5 |
| **71B5** | K050.4.042 | 160 | 81 |
| **80B5** | K050.4.043 | 200 | 81.5 |
| | | | |
| **56B14** | KC40.4.049 | 80 | 81 |
| **63B14** | K050.4.047 | 90 | 83.5 |
| **71B14** | K050.4.045 | 105 | 81 |
| **80B14** | K050.4.046 | 120 | 81.5 |

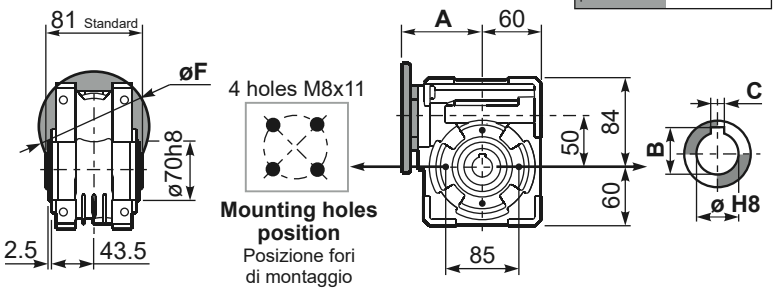


Gearbox weight / peso riduttore: **3.25 kg**

| ø H8 | B | C | *Spacer code |
|---|---|---|---|
| 25 Standard | 28.3 | 8 | KM50.3.025 |
| 24 on request | 27.3 | 8 | KM50.3.024 |

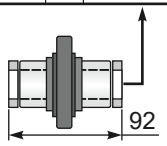


***On Request**
output shaft with spacers

## PM50**FC**... Square flange
Flangia quadrata

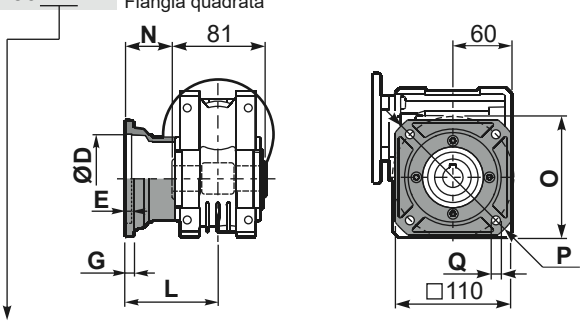


| type **B** | øD | E | G | L | N | O | P | Q | kit code |
|---|---|---|---|---|---|---|---|---|---|
| **FC** | 70 H8 | 5 | 9 | 90 | 49.5 | 85 | 125 | 11 | KM50.9.010 |
| **FL** | 70 H8 | 5 | 9 | 120 | 79.5 | 85 | 125 | 11 | KM50.9.011 |

## PM50**F1**... Round flange
Flangia rotonda

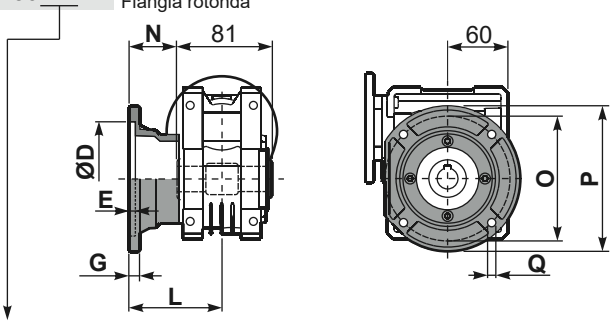


| type **S** | øD | E | G | L | N | O | P | Q | kit code |
|---|---|---|---|---|---|---|---|---|---|
| **F1** | 110 H8 | 5 | 10 | 89 | 48.5 | 130 | 160 | 9.5 | KM50.9.012 |
| **F2** | 95 H8 | 5 | 14.5 | 72 | 31.5 | 115 | 140 | 11 | KM50.9.013 |

## PM50**FB**... Feet
Piedini

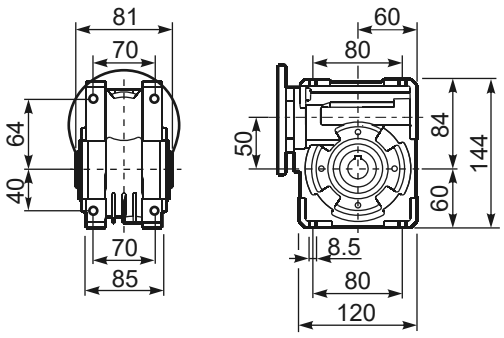


## PM50**BR**... Reaction arm
Braccio di reazione

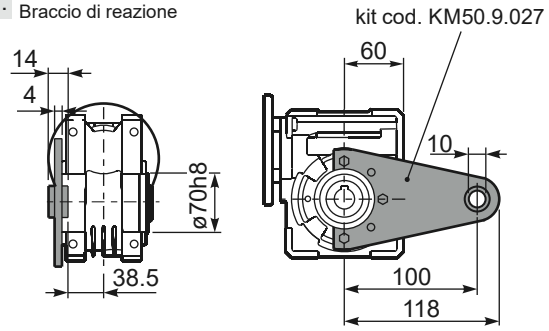


## R M50FB... Input shaft
Albero in entrata

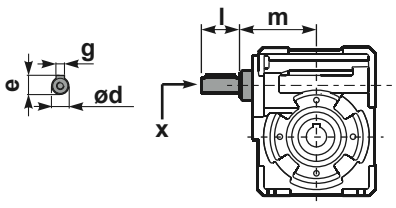


## PM50.....**S**... Single Shaft
Albero lento semplice

## PM50.....**D**... Double Shaft
Albero lento bisp.

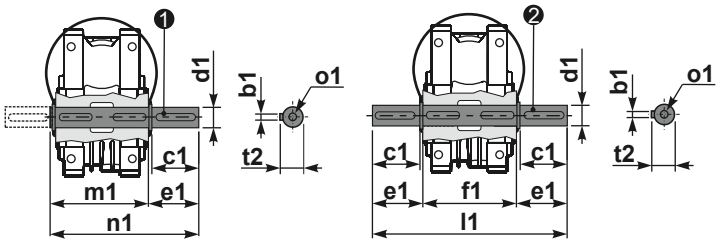


❶ kit cod. K050.5.028 type **B**
kit cod. KS050.5.030 type **S**

❷ kit cod. K050.5.029 type **B**

| | ød | e | g | l | m | x | kit code |
|---|---|---|---|---|---|---|---|
| type **B** | 16 h6 | 18 | 5 | 30 | 79.5 | M6x16 | ❶ K050.5.006 PAM71<br>❷ K050.5.007 PAM80 |
| type **S** | 14 h6 | 16 | 5 | 30 | 79.5 | M5x10 | ❶ KS050.5.008 PAM71<br>❷ KS050.5.009 PAM80 |

| | b1 | c1 | d1 | e1 | f1 | l1 | m1 | n1 | t2 | o1 |
|---|---|---|---|---|---|---|---|---|---|---|
| type **B** | 8 | 52 | $25^{-0.005}_{-0.020}$ | 59.5 | 81 | 200 | 86.5 | 146 | 28 | M8x20 |
| type **S** | 8 | 50 | $24^{-0.005}_{-0.020}$ | 68.8 | - | - | 86.5 | 155 | 27 | M8x20 |